Toroidal Core Potting Box (RH)

The potting boxes are made in gfr Polyamide PA66 of type p6g (RTI long-range temperature +125 °C). Pin material: tin bronze, tinned. Maximum solder temperature 350 °C, 2 sec.
Special materials – e.g. irradiated cross-linked – and designs on request, dimensions in mm/inch.

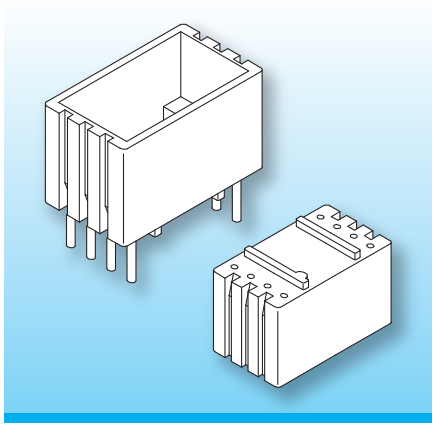

Potting boxes in half height design for glueing and half potting. Easy wire routing through external grooves. “Stand offs” on the bottom of the boxes avoid cold-solder joints into the pcb.

Type		Order-Code
Box:	RH 37-18/-8/2.5-ho/p6g	66215-024
solder-pin:	z808/ua	73294-212

Accessories

on request

wound toroidal core

diameter Ø 37.4/Ø 1.476
width 18.4/0.724

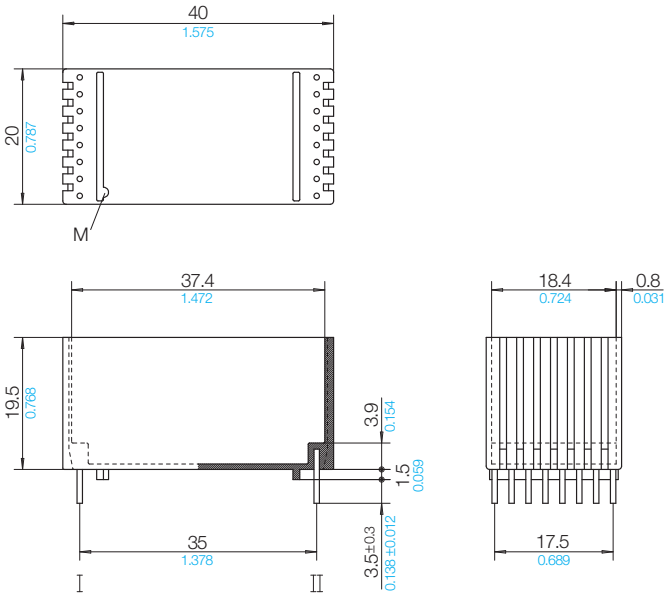

Grid
View pin-side

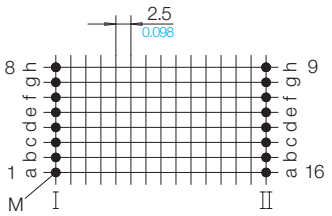

Stand 04/2014 | © 2026 NORWE ONE GmbH

Warranties:
refer to Terms and Conditions of Sale

Valid version of data sheet online

QR Online-Version

NORWE ONE GmbH
Postfach 13 56
51691 Bergneustadt
Paulstraße 5, Pernze
51702 Bergneustadt
Deutschland

Telefon +49 (0) 27 63-807-0
WhatsApp +49 2763 807-0
E-mail verkauf@norwe.de
Internet www.norwe.de
www.norwe.eu

NORWE Inc.
P.O. Box 25 11
North Canton, OH 44720-0511
United States of America

Telefon +1-330 497-8113
E-mail usa@norwe.com
Internet www.norwe.com