EE-SMD-Coilformers (LDS)

The coilformers are made in gfr, cross-linked Polyamide PA66, CRE/35/8LDS2. LDS-structured surfaces 6–8 µm copper, 3–4 µm nickel coating and 0.1 µm gold finish. Maximum solder temperature 400° C, 3 sec. Special designs on request, dimensions in mm/inch.

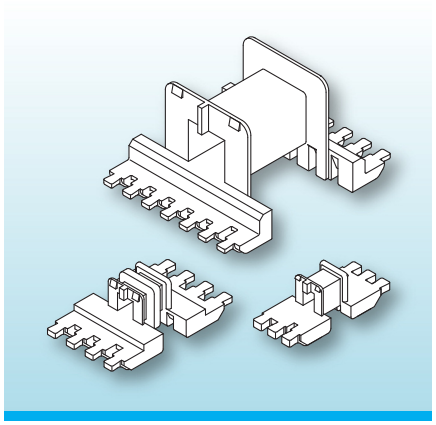

The SMD3-coilformers – like the existing SMD2-coilformers – feature separate winding on and soldering sides, compatible accessories and allow automatic processing. The new SMD-generation additionally impresses by optimal coplanarity, lower weight and excellent solder properties.

Type	Order-Code		Accessories
Coilformer: EE 16-SMD3/1k/10LD/CRE/35/8LDS2	N0075-117	on request	Pick and Place Cap P-EE 16
Coilformer: EE 16-SMD3/2k/10LD/CRE/35/8LDS2	N0081-117	on request	Spring Clip SB-EF 16
LDS-Surface: lds-v1/ob	76400-381		

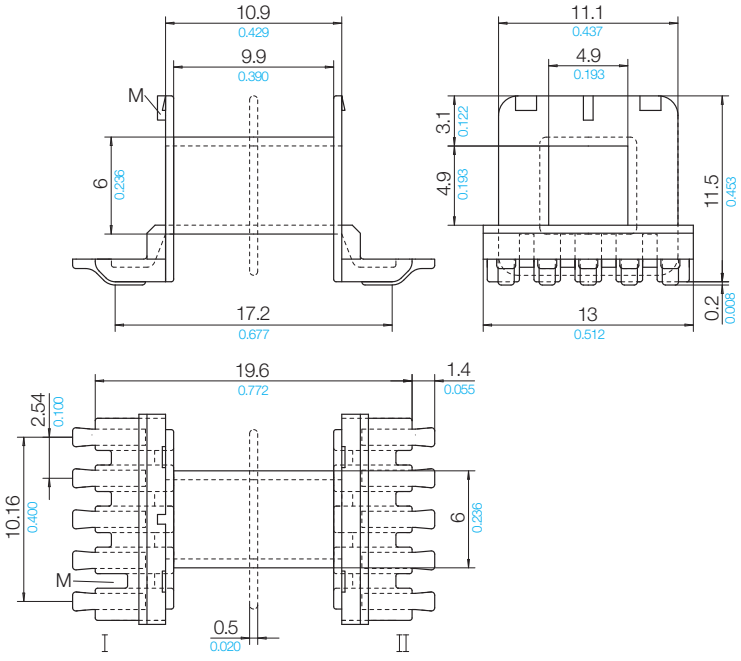

Connecting Surface

Contact side

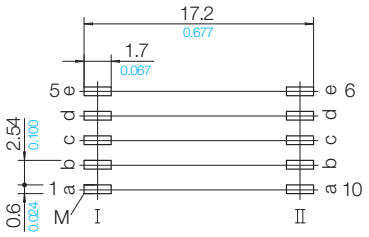

15 A 0 K

Stand 09/2018 | © 2026 NORWE ONE GmbH

Warranties:
refer to Terms and Conditions of Sale

NORWE ONE GmbH
Postfach 13 56
51691 Bergneustadt
Paulstraße 5, Pernze
51702 Bergneustadt
Deutschland

Telefon +49 (0) 27 63-807-0
WhatsApp +49 2763 807-0
E-mail verkauf@norwe.de
Internet www.norwe.de
www.norwe.eu

NORWE Inc.
P.O. Box 25 11
North Canton, OH 44720-0511
United States of America

Telefon +1-330 497-8113
E-mail usa@norwe.com
Internet www.norwe.com

Valid version of data sheet online

QR Online-Version