EI, UI Coilformers

The coilformers are made in Polyamide PA66 gfr, UL 94 HB, temperature for longterm use at +130 °C. The material used is tin bronze, tinned (solder-pins) or brass, tinned (solder-tags).
Maximum solder temperature 350 °C, 2 sec. (Special materials and designs on request, dimensions in mm/inch).

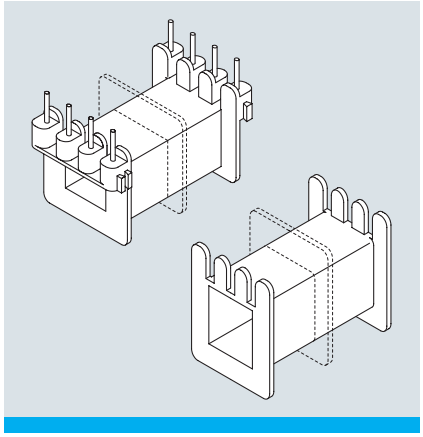

Due to their designs with different connection systems (press-fit pins, bent over pins, soldertags, etc.) the coilformer-versions allow radial as well as axial binding on of the wires, matching your individual fields of application.
We are about to draw up a catalogue of this extensive series step by step – you will find the latest survey of available components on our homepage. For special designs and dimensions as well as available accessories please contact our technical specialists.

Type	Order-Code	Accessories
Coilformer: 2UJ 39-6/2k/1-8/5.0-is/p6g	08990-024	on request
Solder-pin: h813/ua	73499-212	

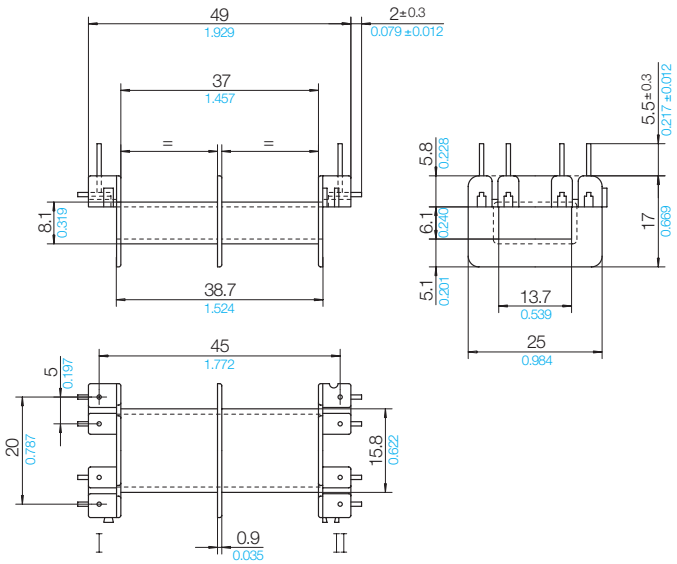

Grid
View pin-side

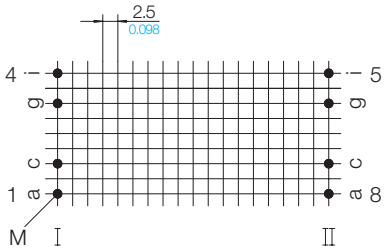

Stand 03/2006 | © 2026 NORWE ONE GmbH

All dimensions in mm/inch

The permissible deviations according to DIN 16901 apply as tolerances

Warranties:
refer to Terms and Conditions of Sale

NORWE ONE GmbH

D-51691 Bergneustadt

Paulstraße 5, Pernze
D-51702 Bergneustadt

Telefon +49 (0) 27 63-807-0
WhatsApp +49 2763 807-0
E-mail verkauf@norwe.de
Internet www.norwe.de
www.norwe.eu

NORWE Inc.

USA- North Canton, OH 44720-0511

Telefon +1-330 497-8113
E-mail usa@norwe.com
Internet www.norwe.com