EI, UI Coilformers

The coilformers are made in Polyamide PA66 gfr, UL 94 HB, temperature for longterm use at +130 °C. The material used is tin bronze, tinned (solder-pins) or brass, tinned (solder-tags).
Maximum solder temperature 350 °C, 2 sec. (Special materials and designs on request, dimensions in mm/inch).

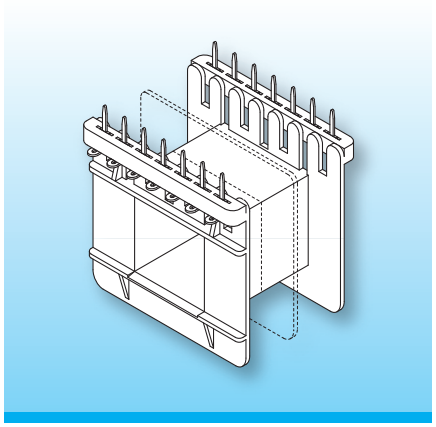

Due to their designs with different connection systems (press-fit pins, bent over pins, soldertags, etc.) the coilformer-versions allow radial as well as axial binding on of the wires, matching your individual fields of application.
We are about to draw up a catalogue of this extensive series step by step – you will find the latest survey of available components on our homepage. For special designs and dimensions as well as available accessories please contact our technical specialists.

Type	Order-Code	Accessories
Coilformer: EJ 60/1k/2g3-/5.0-mn/p6g	06290-024	
Coilformer: EJ 60/2k/2g3-/5.0-mn/p6g	06291-024	
Solder-pin: g3e/wc	73012-259	

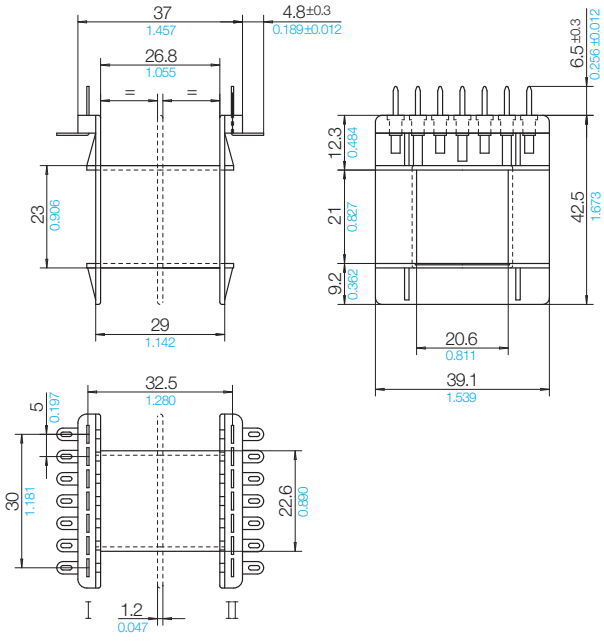

Grid
View tag-side

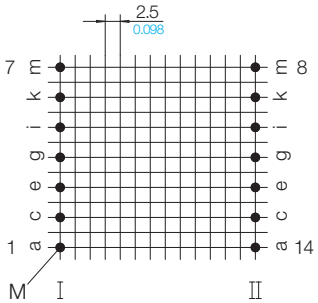

13 B 9 K / 13 B 9 K

Stand 05/2022 | © 2026 NORWE ONE GmbH

All dimensions in mm/inch

The permissible deviations according to DIN 16901 apply as tolerances

Warranties:
refer to Terms and Conditions of Sale

Valid version of data sheet online

QR Online-Version

NORWE ONE GmbH
Paulstraße 5, Pernze
51702 Bergneustadt
Deutschland

Telefon +49 (0) 27 63-807-0
WhatsApp +49 2763 807-0
E-mail verkauf@norwe.de
Internet www.norwe.de
www.norwe.eu

NORWE Inc.
P.O. Box 25 11
North Canton, OH 44720-0511
United States of America

Telefon +1-330 497-8113
E-mail usa@norwe.com
Internet www.norwe.com