EI Coilformers Horizontal

The coilformers are made in gfr Polyamide PA66 of type p6g (RTI long-range temperature +125°C). Pin material is tin bronze, tinned or brass, tinned for tags.
Maximum solder temperature 350°C, 2 sec.
Special materials – e.g. irradiated cross-linked – and designs on request, dimensions in mm/inch.

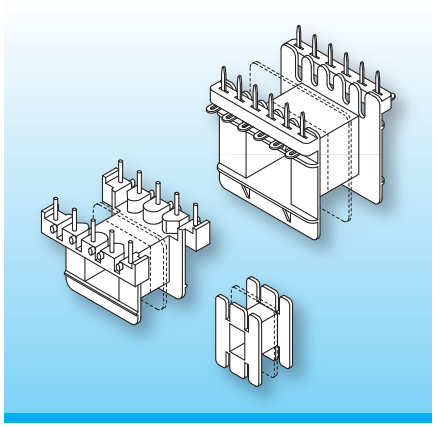

Due to their designs with different connection systems (press-fit pins, bent over pins, solder-tags, etc.) the coilformer-versions allow radial as well as axial binding on of the wires, matching your individual fields of application.
For special designs and dimensions as well as available accessories please contact our technical specialists.

Type	Order-Code	Accessories
Coilformer: EJ 48/1k/a2-8/5.0-kl/p6g	05640-024	Potting Box EJ 48/vlc
Coilformer: EJ 48/2k/a2-8/5.0-kl/p6g	05641-024	
Solder-pin: h813/ua	73499-212	
Solder-pin: z810/ua	73296-212	

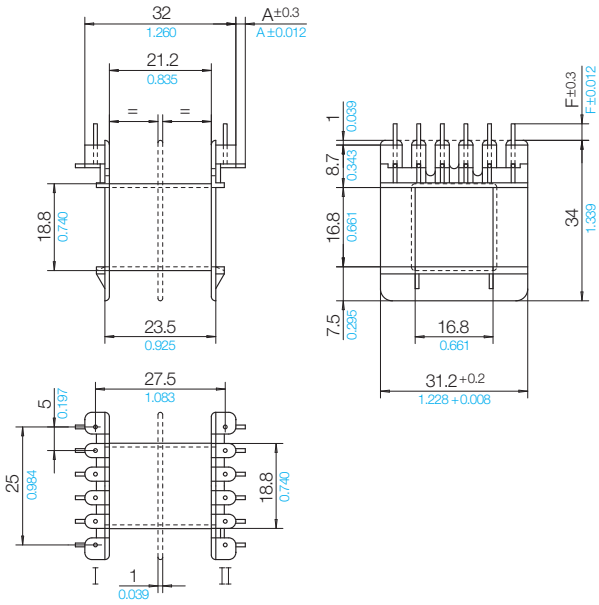

Grid

View pin-side

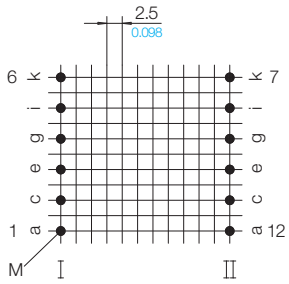

h813 F = 4.0 ±0.3/0.157 ±0.012 A = 1.5 ±0.3/0.059 ±0.012
z810 F = 5.0 ±0.3/0.197 ±0.012

13 B 2 K

Stand 01/2018 | © 2026 NORWE ONE GmbH

Warranties:
refer to Terms and Conditions of Sale

NORWE ONE GmbH
Postfach 13 56
51691 Bergneustadt
Paulstraße 5, Pernze
51702 Bergneustadt
Deutschland

Telefon +49 (0) 27 63-807-0
WhatsApp +49 2763 807-0
E-mail verkauf@norwe.de
Internet www.norwe.de
www.norwe.eu

NORWE Inc.
P.O. Box 25 11
North Canton, OH 44720-0511
United States of America

Telefon +1-330 497-8113
E-mail usa@norwe.com
Internet www.norwe.com

Valid version of data sheet online

QR Online-Version