EJ 38 – EJ 96b
Coilformer Elements

The components are made in gfr Polyamide PA66 of type p6g (RTI long-range temperature +125° C). Pin material is tin bronze, tinned or brass, tinned for tags. Maximum solder temperature 350° C, 2 sec. Special materials – e.g. irradiated cross-linked – designs on request, dimensions in mm/inch.

The coilformer elements are sorted according to size.

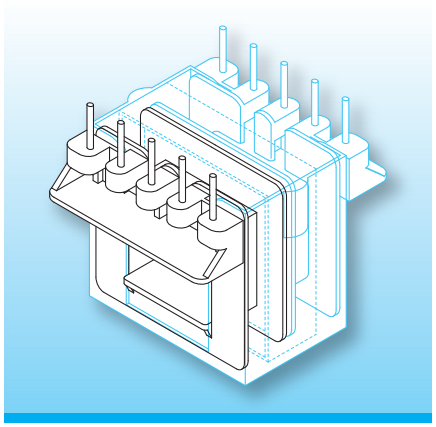

The primary and secondary areas can be wound in separate working steps and the design also permits alternative connection systems.

The selection of components listed below is essential to a complete coilformer. The design are marked A, B or C.

Type	Order-Code
Coilformer: EJ 84a/x/2g2-/5.0-s/p6g	08221-024
Solder-tag: g2s/wd	71040-261

Component-Selection

A	1 x housing	EJ 84/i
	1 x frame	EJ 84/r
B	1 x housing	EJ 84/d

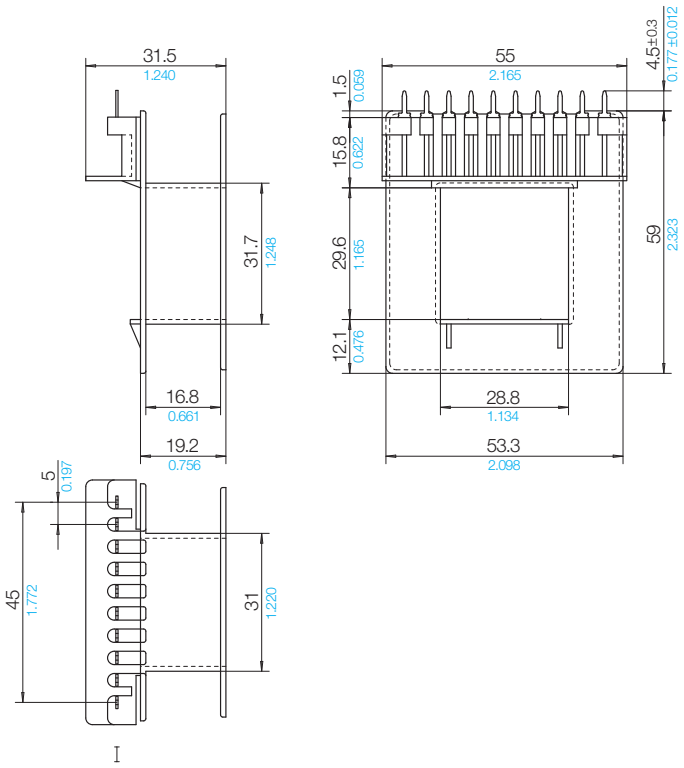

Grid
View tag-side

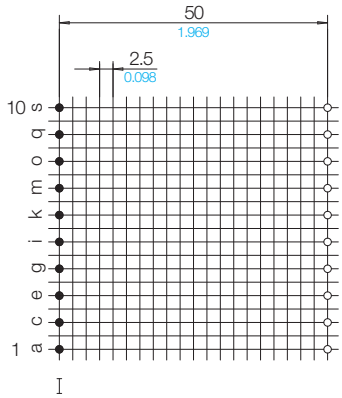

Stand 07/2015 | © 2026 NORWE ONE GmbH

Warranties:
refer to Terms and Conditions of Sale

NORWE ONE GmbH
Postfach 13 56
51691 Bergneustadt
Paulstraße 5, Pernze
51702 Bergneustadt
Deutschland

NORWE Inc.
P.O. Box 25 11
North Canton, OH 44720-0511
United States of America

Telefon +1-330 497-8113
E-mail usa@norwe.com
Internet www.norwe.com

Telefon +49 (0) 27 63-807-0
WhatsApp +49 2763 807-0
E-mail verkauf@norwe.de
Internet www.norwe.de
www.norwe.eu