UNI EE Coilformers

The coilformers are made in gfr Polyamide PA66 of type p6g (RTI long-range temperature +125°C). Pin material is tin bronze, tinned for solder-pins and brass, tinned for solder-tags. Max. solder temperature 350°C, 2 sec.
Special materials – e.g. irradiated cross-linked – and designs on request, dimensions in mm/inch.

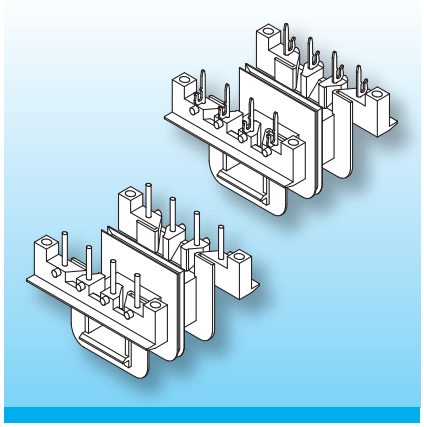

The coilformers are are fitted with solder-pins alternatively with solder-tags for litz-wire.
Fitting the additional shroud achieves creepage- and clearance dimensions of 8 mm/0.315 inch between primary and secondary, and 4.8 mm/0.189 inch to the core.

Elaborate description of the designs with the different implementations, see at catalogue.

Type	Order-Code	Accessories
Coilformer: EE 25-11/2s/7-8/5.0-gi/p6g	22128-024	Shroud EE 25-11/2v
Solder-pin: z809/ua	73295-212	self-tapping screw (on request)
Solder-tag: s31/we	75526-263	

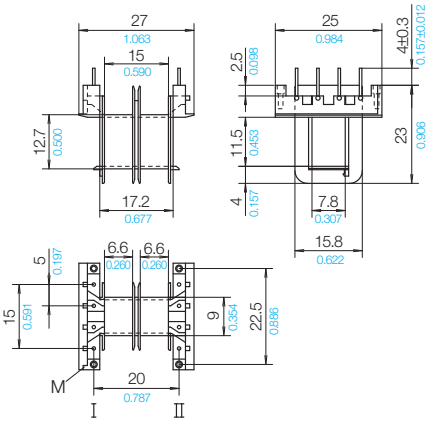

Grid
View pin-side

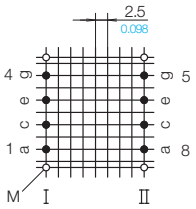

Stand 08/2010 | © 2026 NORWE ONE GmbH

All dimensions in mm/inch

The permissible deviations according to DIN 16901 apply as tolerances

Warranties:
refer to Terms and Conditions of Sale

NORWE ONE GmbH

Postfach 13 56
51691 Bergneustadt

Paulstraße 5, Pernze
51702 Bergneustadt

Deutschland

Telefon +49 (0) 27 63-807-0
WhatsApp +49 2763 807-0
E-mail verkauf@norwe.de
Internet www.norwe.de
www.norwe.eu

NORWE Inc.

P.O. Box 25 11
North Canton, OH 44720-0511

United States of America

Telefon +1-330 497-8113
E-mail usa@norwe.com
Internet www.norwe.com