UNI EJ Coilformers

The coilformers are made in gfr Polyamide PA66 of type p6g (RTI long-range temperature +125°C) Pin material is tin bronze, tinned for solder-pins and brass, tinned for solder-tags. Max. solder temperature +350°C, 2 sec.
Special materials – e.g. irradiated cross-linked – and designs on request, dimensions in mm/inch.

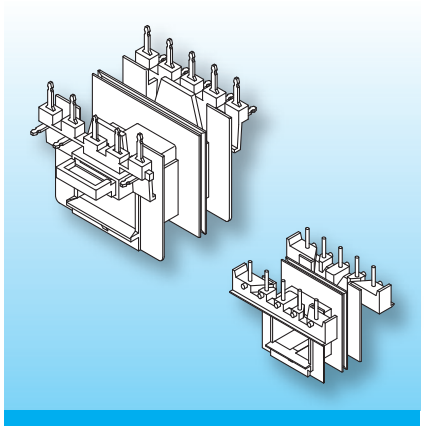

The coilformers are fitted with solder-pins and solder-tags.
By fitting shrouds and insulating bridges creepage- and clearance distances of 11 mm/0.433 inch are achieved between primary and secondary, and 6 mm/0.236 inch to the core.

Elaborate description of the designs with the different implementations, see at catalogue.

Type	Order-Code	Accessories
Coilformer: EJ 30-5/1s/2g2-/5.0-ii/p6g	20002-024	Shroud EJ 30-5
Coilformer: EJ 30-5/6-4s/2g2-/5.0-ii/p6g	20008-024	Insulating Bridge EJ 30
Solder-tag: s14/wd	75508-261	

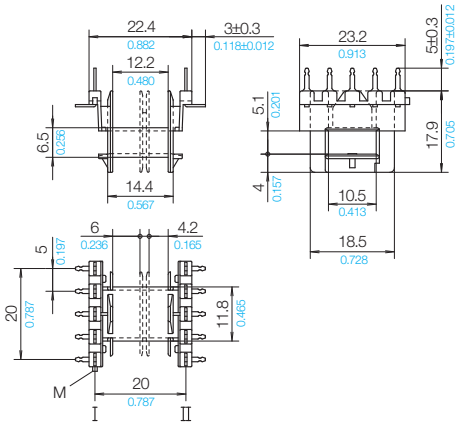

Grid
View tag-side

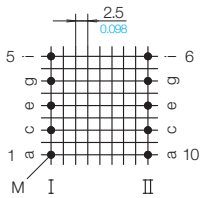

Stand 06/2012 | © 2026 NORWE ONE GmbH

All dimensions in mm/inch

The permissible deviations according to DIN 16901 apply as tolerances

Warranties:
refer to Terms and Conditions of Sale

Telefon +49 (0) 27 63-807-0
WhatsApp +49 2763 807-0
E-mail verkauf@norwe.de
Internet www.norwe.de
www.norwe.eu

NORWE ONE GmbH
Postfach 13 56
51691 Bergneustadt
Paulstraße 5, Pernze
51702 Bergneustadt
Deutschland

NORWE Inc.
P.O. Box 25 11
North Canton, OH 44720-0511
United States of America

Telefon +1-330 497-8113
E-mail usa@norwe.com
Internet www.norwe.com