H-RG SMD Potting Boxes (ft)

The potting boxes (ft) are made in gfr Polyphenylene Sulfide PPS of type torA504 (RTI long-range temperature +130° C) and are suitable for reflow soldering.
Pin material: tin bronze, tinned.
Special materials – e.g. irradiated cross-linked – and designs on request, dimensions in mm/inch.

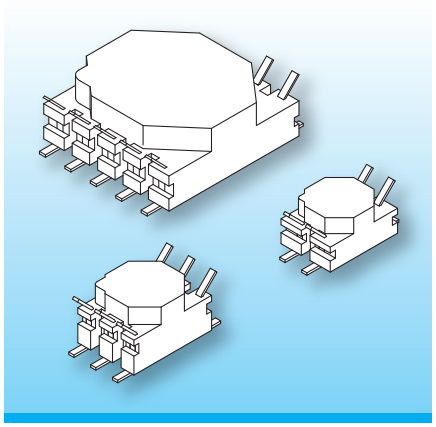

The potting boxes are for surface mounting, and are suitable for house filter chokes or ISDN transformers. The binding-on / soldering section of the terminal ft is at the top end which leaves the SMD side of the terminal free from tin. The boxes are suitable for low profile applications.

Type	Order-Code
Potting Box: H-RG 11.5/11.5/6.1/10f-625-/torA504	N0352-132 on request
Solder-pin: ft625-80/ub	75880-213

Accessories

wound toroidal core

diameter Ø 11.5 / Ø 0.453
width 5.1 / 0.201

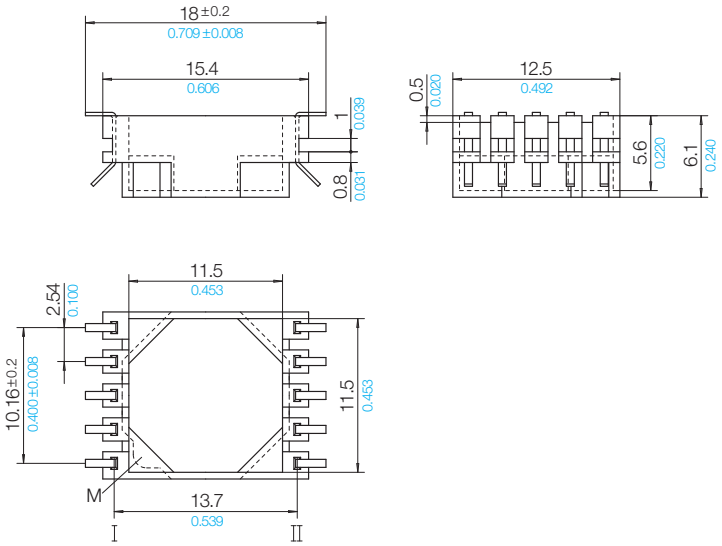

Pin Connecting Surface
View pin-side

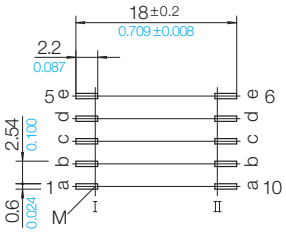

Stand 03/2014 | © 2026 NORWE ONE GmbH

Warranties:
refer to Terms and Conditions of Sale

Valid version of data sheet online

QR Online-Version

NORWE ONE GmbH

51691 Bergneustadt
Paulstraße 5, Pernze
51702 Bergneustadt
Deutschland

Telefon +49 (0) 27 63-807-0
WhatsApp +49 2763 807-0
E-mail verkauf@norwe.de
Internet www.norwe.de
www.norwe.eu

NORWE Inc.

North Canton, OH 44720-0511
United States of America

Telefon +1-330 497-8113
E-mail usa@norwe.com
Internet www.norwe.com