ER-SMD Coilformers (fm)

The coilformers are made in gfr Polyphenylene Sulfide PPS of type torA504 (RTI long-range temperature +130°C) and are suitable for reflow soldering.
Pin material: tin bronze, tinned.
Special materials – e.g. irradiated cross-linked – and designs on request, dimensions in mm/inch).

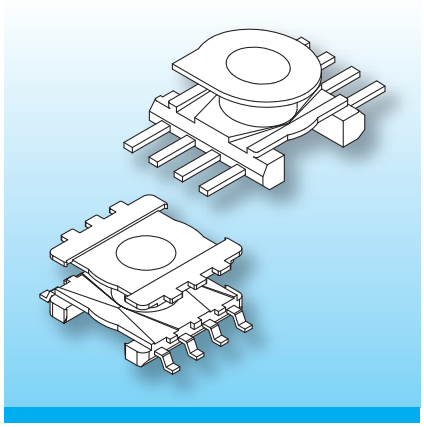

The coilformers are fitted with "gull-wing" terminals. To prevent melt-out, these should ideally be mechanically secured when soldering on the wires. Instead of glueing the ferrites, use can be made of the SB-ER spring clips.

In addition a new version for automatic winding has been improved once again.

Type	Order-Code	Accessories
Coilformer: ER 9.5/5-SMD1/1k/11.0/8f-625-/torA504	94219-132	Spring-Clip SB-ER 9.5/5
Solder-pin: fm625-35/ub	75802-213	
Solder-pin: f625-35/ub	75852-213	

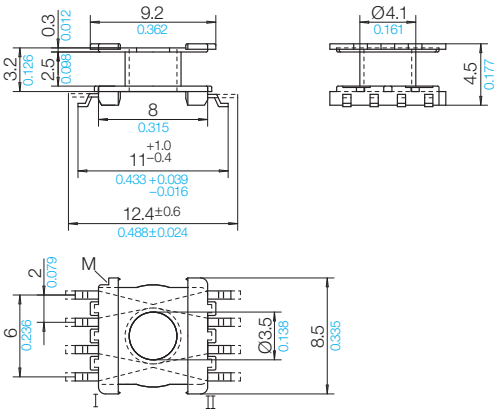

Pin Connecting Surface

View pin-side

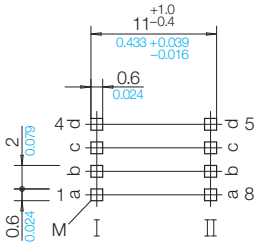

Stand 07/2011 | © 2026 NORWE ONE GmbH

All dimensions in mm/inch

The permissible deviations according to DIN 16901 apply as tolerances

Warranties:
refer to Terms and Conditions of Sale

Telefon +49 (0) 27 63-807-0
WhatsApp +49 2763 807-0
E-mail verkauf@norwe.de
Internet www.norwe.de
www.norwe.eu

NORWE ONE GmbH

51691 Bergneustadt
Paulstraße 5, Pernze
51702 Bergneustadt
Deutschland

NORWE Inc.

North Canton, OH 44720-0511
United States of America

Telefon +1-330 497-8113
E-mail usa@norwe.com
Internet www.norwe.com