EP-SMD Coilformers (fu)

The coilformers are made in gfr Polyphenylene Sulfide PPS of type torA504 (RTI long-range temperature +130° C) and are suitable for reflow soldering.
Pin material: tin bronze, tinned.
Special materials – e.g. irradiated cross-linked – and designs on request, dimensions in mm/inch).

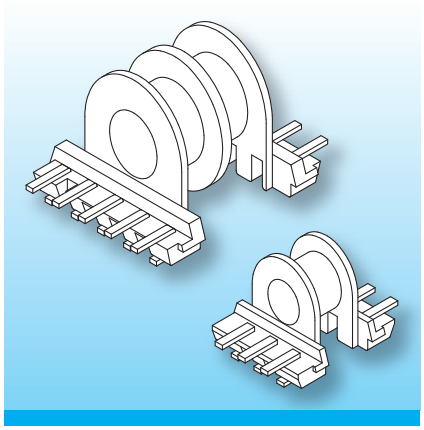

The coilformers are fitted with U-shaped terminals. The two sides of the terminals allow automatic binding-on and soldering of the wires, leaving the pcb-side of the terminal free from tin. Instead of glueing the ferrites, use can be made of the SB-EP Spring-Clips. Automatic placing of the coilformer and the ferrites is possible by using a Snap-on Cap. This cap is spring-loaded and keeps the ferrites and coilformer together. Slots in the Snap-on Caps allow additional glueing.

Type	Order-Code	Accessories
Coilformer: EP 7-SMD2/1k/6f-625-/torA504	90142-132	Spring-Clip SB-EP 7
Coilformer: EP 7-SMD2/2k/6f-625-/torA504	90141-132	Snap-on Cap EP 7/FG
Solder-pin: fu625-67/ub	75826-213	

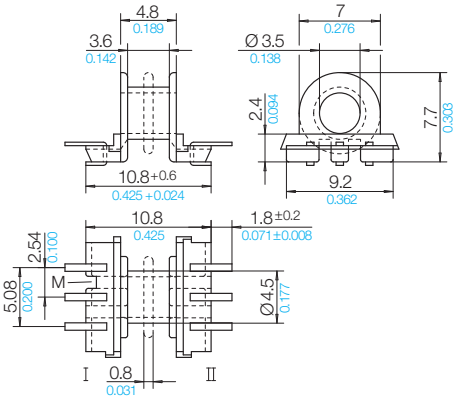

Pin Connecting Surface

View pin-side

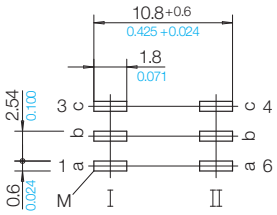

Stand 07/2011 | © 2026 NORWE ONE GmbH

All dimensions in mm/inch

The permissible deviations according to DIN 16901 apply as tolerances

Warranties:
refer to Terms and Conditions of Sale

Telefon +49 (0) 27 63-807-0
WhatsApp +49 2763 807-0
E-mail verkauf@norwe.de
Internet www.norwe.de
www.norwe.eu

NORWE ONE GmbH

51691 Bergneustadt
Paulstraße 5, Pernze
51702 Bergneustadt
Deutschland

NORWE Inc.

North Canton, OH 44720-0511
United States of America

Telefon +1-330 497-8113
E-mail usa@norwe.com
Internet www.norwe.com