PQ Coilformers with Dual-in-Line Solder-pins.
The coilformers are made in gfr Polyethylene Terephthalate PET of type SKYT.5220FR (long-range temperature +155° C). Pin material: tin bronze, tinned. Maximum solder temperature 350° C for up to 2 sec. (Special materials – for example radiated cross-linked – and designs on request. Dimensions in mm/inch).

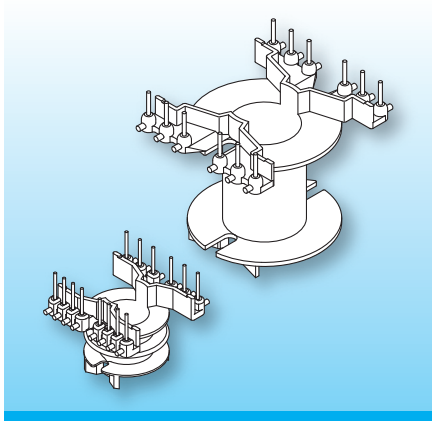

The coilformers with vertical axis are suitable for winding on the latest NC machines. The DIL pin configuration with radial “noses” ensures tension relieved axial binding-on of the wires.
“Stand-offs” minimize cold-solder joints into the pcb.

Type	Order-Code		Accessories
Coilformer: PQ 20-20/1k/-6/3.81-2.54-ii/SKYT.5220FR	90362-186		on request
Coilformer: PQ 20-20/2k/-6/3.81-2.54-ii/SKYT.5220FR	N0504-186	on request	
Solder-pin: z609/ua	73265-212		

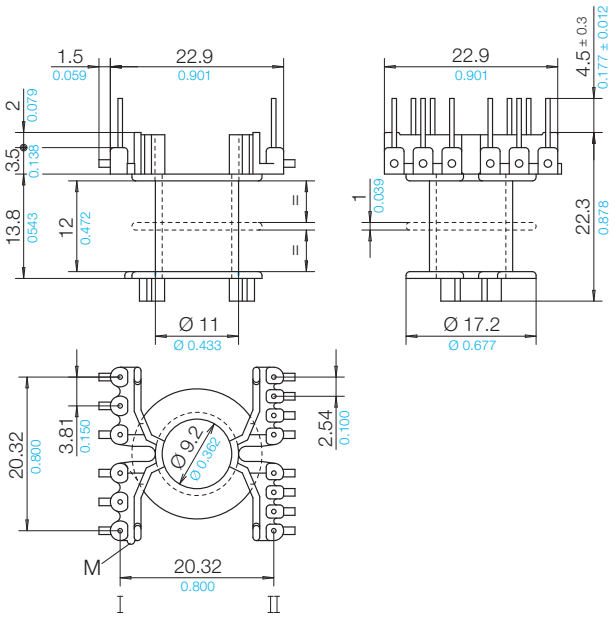

Grid
View pin-side

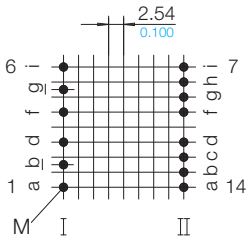

04 B 0 K

Stand 09/2022 | © 2026 NORWE ONE GmbH

All dimensions in mm/inch

The permissible deviations according to DIN 16901 apply as tolerances

Warranties:
refer to Terms and Conditions of Sale

Valid version of data sheet online

QR Online-Version

NORWE ONE GmbH
Paulstraße 5, Pernze
51702 Bergneustadt
Deutschland

Telefon +49 (0) 27 63-807-0
WhatsApp +49 2763 807-0
E-mail verkauf@norwe.de
Internet www.norwe.de
www.norwe.eu

NORWE Inc.
P.O. Box 25 11
North Canton, OH 44720-0511
United States of America

Telefon +1-330 497-8113
E-mail usa@norwe.com
Internet www.norwe.com