Standard RM, RM-LP Low Profile with Dual-in-Line solder-pins
The coilformers are made in gfr Polyethylene Terephthalate PET of type rtg nat. (RTI long-range temperature +155° C) and made in gfr Polyamide PA66 of type p6g (RTI long-range temperature +125° C).
Pin material: tin bronze, tinned.
Maximum solder temperature 350°C, 2 sec.
Special materials – eg. irradiated cross-linked – and designs on request, dimensions in mm/inch.

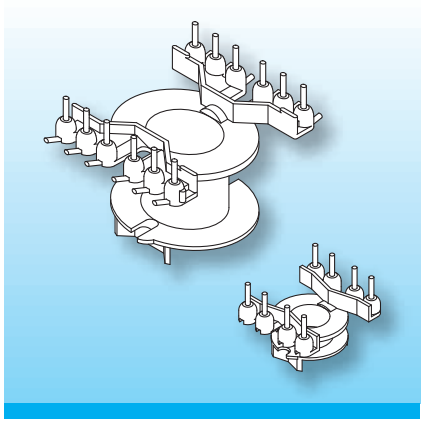

Two types of Dual-in-Line solder-pins can be fitted.
L-shaped type h for radial binding on, side wrapping and soldering. Tension relief for thin or litz wire is possible.
Straight solder-pins type z for axial binding-on and soldering. Less pcb area is required using this solder-pin.

Type	Order-Code	Accessories
Coilformer: RM 6-LP/1k/8-8/fg/rtg	60120-087	
Solder-pin: z806/ua	73292-212	
Solder-pin: h811/ua	73497-212	

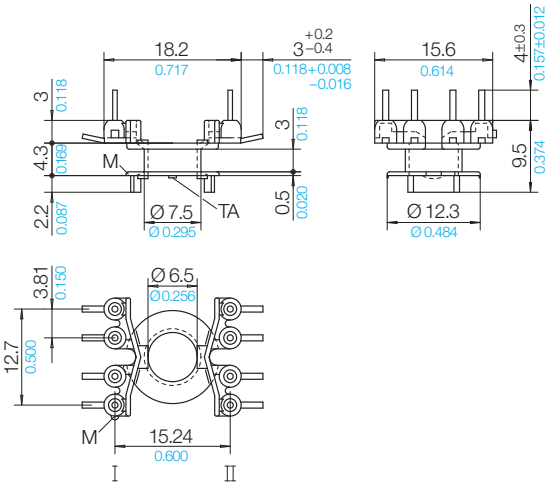

Grid
View pin-side

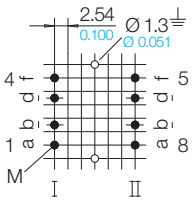

Stand 11/2011 | © 2026 NORWE ONE GmbH

All dimensions in mm/inch

The permissible deviations according to DIN 16901 apply as tolerances

Warranties:
refer to Terms and Conditions of Sale

Telefon +49 (0) 27 63-807-0
WhatsApp +49 2763 807-0
E-mail verkauf@norwe.de
Internet www.norwe.de
www.norwe.eu

NORWE ONE GmbH

51691 Bergneustadt
Paulstraße 5, Pernze
51702 Bergneustadt
Deutschland

NORWE Inc.

North Canton, OH 44720-0511
United States of America

Telefon +1-330 497-8113
E-mail usa@norwe.com
Internet www.norwe.com