EER Coilformers
Vertical

The coilformers are made in gfr Polyethylene Terephthalate PET of type SKYT.5220FR (RTI long-range temperature +155° C).
Pin material is tin bronze, tinned.
Max. solder temperature +350° C, 2 sec.
Special materials – e.g. irradiated cross-linked – and designs on request, dimensions in mm/inch.

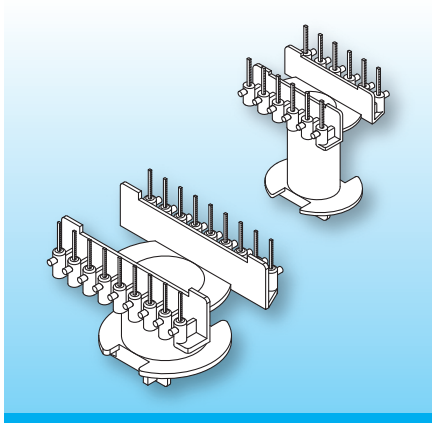

The coilformers are available in the latest design with solder-pins.

For each application the most suitable solution – inform yourself about the individual qualities of the different designs on catalogue-informations.

Type	Order-Code		Accessories
Coilformer: EER 40/v12/-8/SKYT.5220FR	N0043-186	on request	on request
Solder-pin: z813/ua	73299-212		

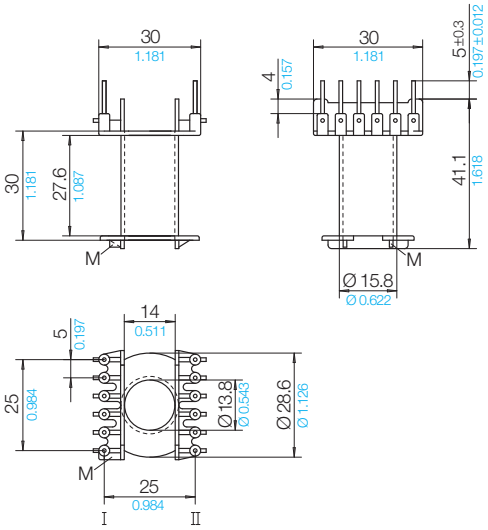

Grid
View pin-side

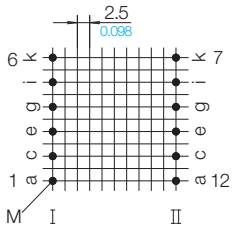

02 A 0 K

Stand 10/2022 | © 2026 NORWE ONE GmbH

All dimensions in mm/inch

The permissible deviations according to DIN 16901 apply as tolerances

Warranties:
refer to Terms and Conditions of Sale

Valid version of data sheet online

QR Online-Version

NORWE ONE GmbH
Paulstraße 5, Pernze
51702 Bergneustadt
Deutschland

Telefon +49 (0) 27 63-807-0
WhatsApp +49 2763 807-0
E-mail verkauf@norwe.de
Internet www.norwe.de
www.norwe.eu

NORWE Inc.
P.O. Box 25 11
North Canton, OH 44720-0511
United States of America

Telefon +1-330 497-8113
E-mail usa@norwe.com
Internet www.norwe.com