ETD Safety Class Coilformers Concentric Design

The coilformers are made in gfr Polyamide PA66 of type A RV250 nat. (RTI long-range temperature +100° C). The solder-tags are punched from brass and are subsequently tinned. Max. solder temperature +350° C, 2 sec. Special materials – e.g. irradiated cross-linked – and designs on request, dimensions in mm/inch.

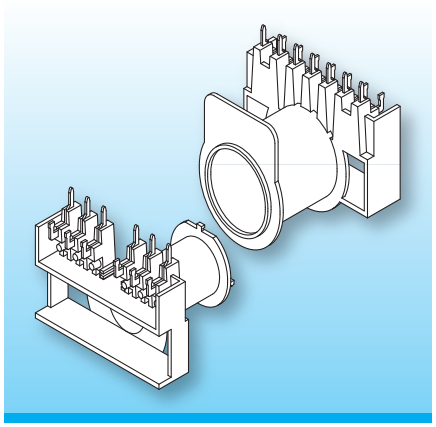

The ETD safety class coilformers have the advantage that the primary and secondary windings are wound separately on the coilformer halves, with the two windings pushed together to form a complete winding assembly.

Elaborate description of the designs please see catalogue-info.

Type	Order-Code	Accessories
Coilformer: ETD 34/sek/s-/5.08-m/A RV250 nat.	90696-106	on request
Solder-tag: s18/wd	75511-261	

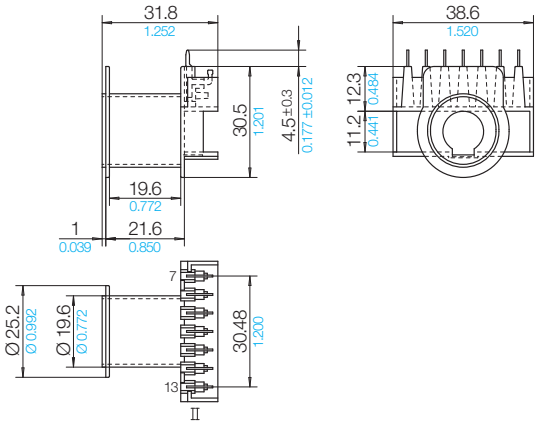

Grid
View tag-side

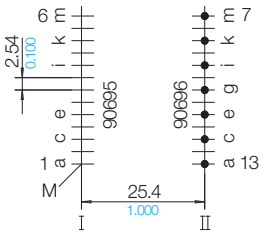

02 B 2 S

Stand 10/2021 | © 2026 NORWE ONE GmbH

All dimensions in mm/inch

The permissible deviations according to DIN 16901 apply as tolerances

Warranties:
refer to Terms and Conditions of Sale

Valid version of data sheet online

QR Online-Version

NORWE ONE GmbH
Paulstraße 5, Pernze
51702 Bergneustadt
Deutschland

Telefon +49 (0) 27 63-807-0
WhatsApp +49 2763 807-0
E-mail verkauf@norwe.de
Internet www.norwe.de
www.norwe.eu

NORWE Inc.
P.O. Box 25 11
North Canton, OH 44720-0511
United States of America

Telefon +1-330 497-8113
E-mail usa@norwe.com
Internet www.norwe.com