ETD Coilformers
Vertical

The coilformers are made in gfr Polyethylene Terephthalate PET of type SKYT.5220FR (RTI long-range temperature +155° C).
Pin material is tin bronze, tinned for solder-pins and brass, tinned for solder-tags. Max. solder temperature +350° C, 2 sec.
Special materials – e.g. irradiated cross-linked – and designs on request, dimensions in mm/inch.

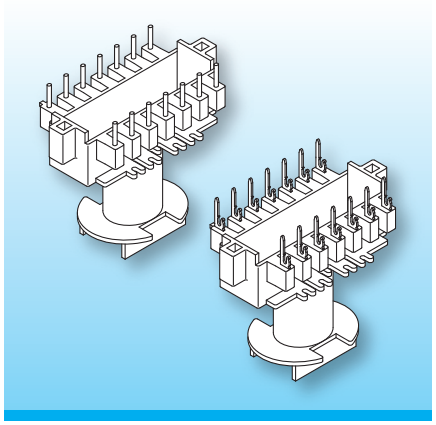

The coilformers are available in the well-established versions ETD standard with solder-pins and ETD standard with solder-tags.

For each application the most suitable solution – inform yourself about the individual qualities of the different designs on catalogue-info.

Type	Order-Code	Accessories
Coilformer: ETD 19/v10/-1/SKYT.5220FR	90635-186	Clip FK-ETD 19
Solder-pin: z112/ua	73322-212	Spacers DR
Self-tapping screw: DIN 7981-St 2,9 x 6,5-F-H	N0049-000 on request	

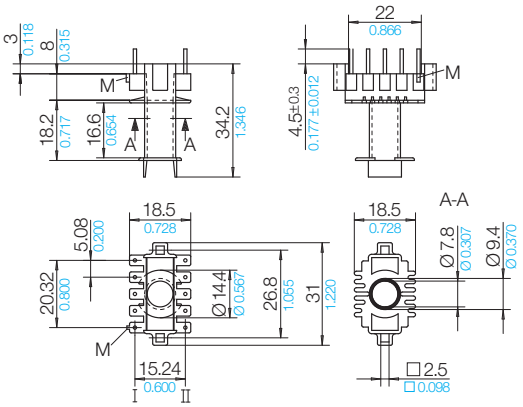

Grid
View pin-side

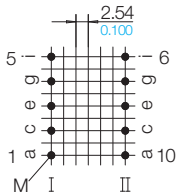

02 B 2 G

Stand 10/2022 | © 2026 NORWE ONE GmbH

All dimensions in mm/inch

The permissible deviations according to DIN 16901 apply as tolerances

Warranties:
refer to Terms and Conditions of Sale

Valid version of data sheet online

QR Online-Version

NORWE ONE GmbH
Paulstraße 5, Pernze
51702 Bergneustadt
Deutschland

Telefon +49 (0) 27 63-807-0
WhatsApp +49 2763 807-0
E-mail verkauf@norwe.de
Internet www.norwe.de
www.norwe.eu

NORWE Inc.
P.O. Box 25 11
North Canton, OH 44720-0511
United States of America

Telefon +1-330 497-8113
E-mail usa@norwe.com
Internet www.norwe.com