EE 8 – EE 32 Horizontal

The coilformers are made in gfr Polyamide PA66 of type x2g5 (RTI long-range temperature +120° C) and in gfr Polyethylene Terephthalate PET of type rtg nat. (RTI long-range temperature +155° C). Pin material is tin bronze, tinned and tag material is brass, tinned. Maximum solder temperature 350° C, 2 sec.
Special materials – e.g. irradiated cross-linked – and designs on request, dimensions in mm/inch.

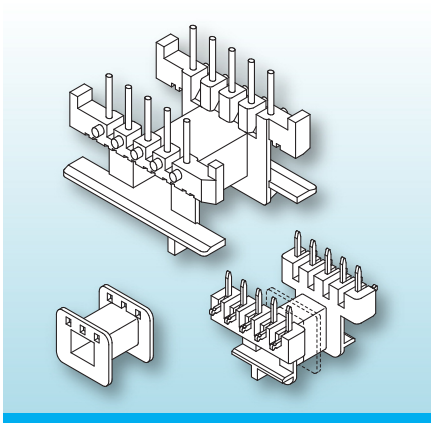

This group of horizontal coilformers is sorted by ferrite core / lamination size and each by pinning with straight pins, side-wrapping pins, solder-tags and conventional coilformers.
Most designs feature terminal strips with “noses” which provide tension-relief of the winding wires and “stand-offs” which allow clean soldering of the coilformer onto the pcb to minimize cold-solder joints. Some coilformers also feature extended flanges to prevent clips sliding off.

Type	Order-Code	Accessories
Coilformer: EE 20/1k/c7-6/2.5-g(h),bh/x2g5	10045-017	Spring-Clip SB-EF/E 20
Coilformer: EE 20/2k/7-6/2.5-g(h),bh/x2g5	10046-017	
Solder-pin: h608/ua	73464-212	
Solder-pin: h610/ua	73466-212	

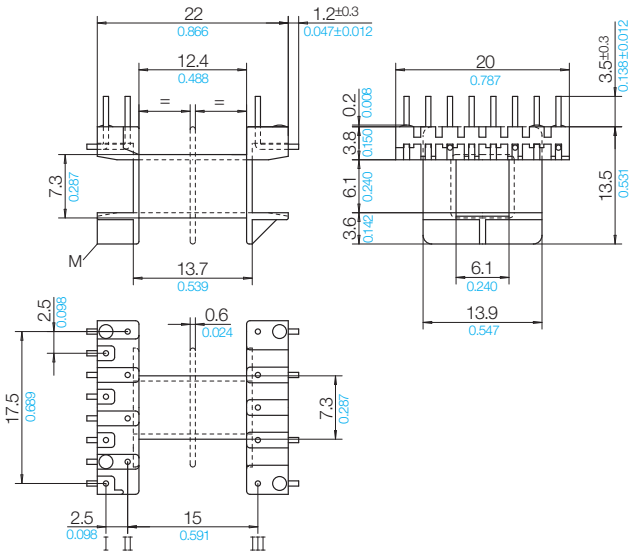

Grid
View pin-side

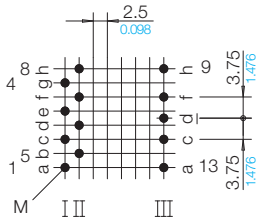

01 B 3 S / 01 B 2 G

Stand 01/2023 | © 2026 NORWE ONE GmbH

All dimensions in mm/inch

The permissible deviations according to DIN 16901 apply as tolerances

Warranties:
refer to Terms and Conditions of Sale

Valid version of data sheet online

QR Online-Version

NORWE ONE GmbH
Paulstraße 5, Pernze
51702 Bergneustadt
Deutschland

Telefon +49 (0) 27 63-807-0
WhatsApp +49 2763 807-0
E-mail verkauf@norwe.de
Internet www.norwe.de
www.norwe.eu

NORWE Inc.
P.O. Box 25 11
North Canton, OH 44720-0511
United States of America

Telefon +1-330 497-8113
E-mail usa@norwe.com
Internet www.norwe.com