EE 8 – EE 32 Horizontal

The coilformers are made in gfr Polyamide PA66 of type p6g (RTI long-range temperature +125° C), x2g5 (RTI long-range temperature +120° C) and A3X2G10, sw (RTI long-range temperature +115° C). Pin material is tin bronze, tinned for solder-pins and brass, tinned for solder-tags. Max. solder temperature +350° C, 2 sec. Special materials – e.g. irradiated cross-linked – and designs on request, dimensions in mm/inch.

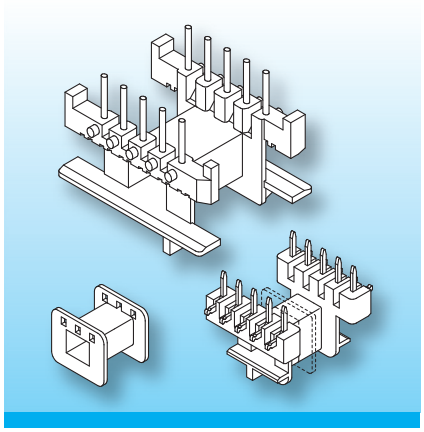

This group of horizontal coilformers is sorted by ferrite core / lamination size and each by pinning with straight pins, side-wrapping pins, solder-tags and conventional coilformers.
Most designs feature terminal strips with “noses” which provide tension-relief of the winding wires and “stand-offs” which allow clean soldering of the coilformer onto the pcb to minimize cold-solder joints. Some coilformers also feature extended flanges to prevent clips sliding off.

Type	Order-Code	Accessories
Coilformer: EE 16/1k/7-6/3,75-c(12,5)/p6g	09845-024	Snap-on Potting Box EE 16
Solder-pin: z608/ua	73264-212	Spring-Clip SB-EF 16

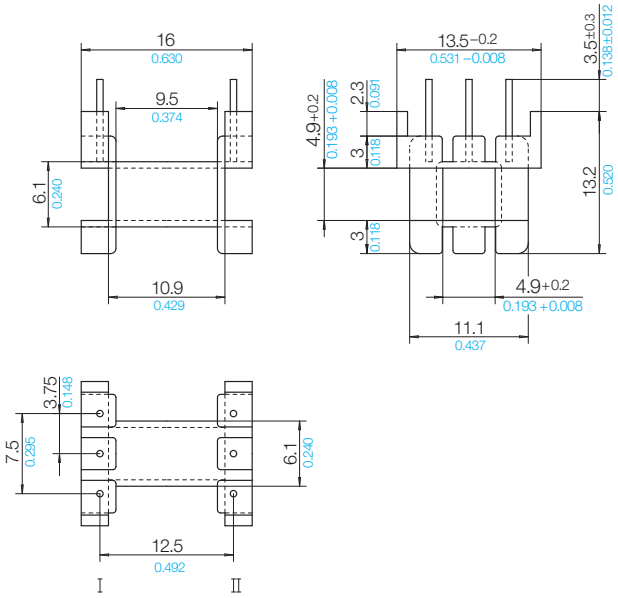

Grid
View pin-side

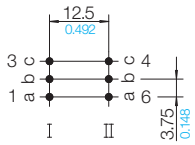

Stand 12/2011 | © 2026 NORWE ONE GmbH

All dimensions in mm/inch

The permissible deviations according to DIN 16901 apply as tolerances

Warranties:
refer to Terms and Conditions of Sale

Telefon +49 (0) 27 63-807-0
WhatsApp +49 2763 807-0
E-mail verkauf@norwe.de
Internet www.norwe.de
www.norwe.eu

NORWE ONE GmbH

51691 Bergneustadt
Paulstraße 5, Pernze
51702 Bergneustadt
Deutschland

NORWE Inc.

North Canton, OH 44720-0511
United States of America

Telefon +1-330 497-8113
E-mail usa@norwe.com
Internet www.norwe.com