M 20 – M 74 / E 70 – E 80
Horizontal Coilformers

The coilformers are made in gfr Polyamide PA66 of type p6g (RTI long-range temperature +125° C) and A RV250 nat. (RTI long-range temperature +100° C).
Pin material is tin bronze, tinned for solder-pins and brass, tinned for solder-tags.
Max. solder temperature +350° C, 2 sec. Special materials – e.g. irradiated cross-linked – and designs on request, dimensions in mm/inch.

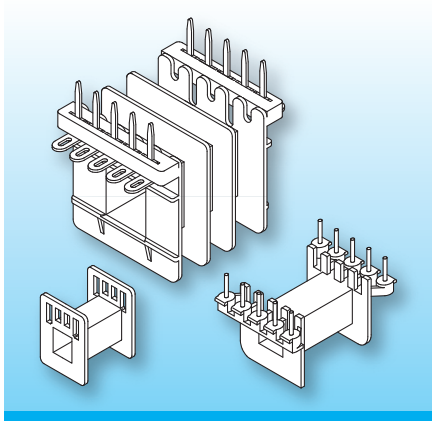

This group of horizontal coilformers is sorted by ferrite core / lamination size and each by pinning with straight pins, side-wrapping pins, solder-tags and conventional coilformers.
Most designs feature terminal strips with “noses” which provide tension-relief of the winding wires and “stand-offs” which allow clean soldering of the coilformer onto the pcb to minimize cold-solder joints. Some coilformers also feature extended flanges to prevent clips sliding off.

Type	Order-Code	Accessories
Coilformer: M 42-20/3k/2-1/5.0-go/A RV250 nat.	01352-106	Clip FK-E 42
Solder-pin: z110/ua	73320-212	Frame M 42-20/s

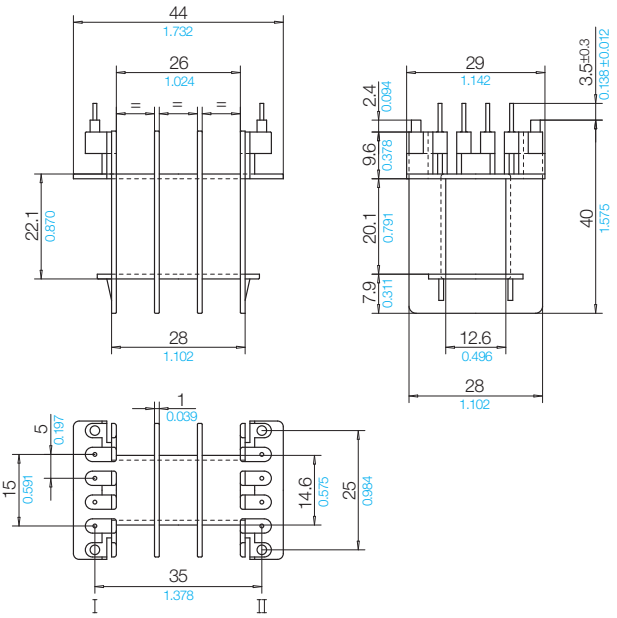

Grid
View pin-side

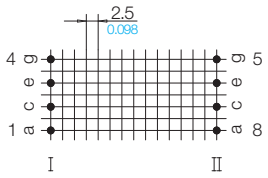

01 B 4 G

Stand 07/2018 | © 2026 NORWE ONE GmbH

Warranties:
refer to Terms and Conditions of Sale

Valid version of data sheet online

QR Online-Version

NORWE ONE GmbH
Postfach 13 56
51691 Bergneustadt
Paulstraße 5, Pernze
51702 Bergneustadt
Deutschland

Telefon +49 (0) 27 63-807-0
WhatsApp +49 2763 807-0
E-mail verkauf@norwe.de
Internet www.norwe.de
www.norwe.eu

NORWE Inc.
P.O. Box 25 11
North Canton, OH 44720-0511
United States of America

Telefon +1-330 497-8113
E-mail usa@norwe.com
Internet www.norwe.com