DIL-Sockets with Stand-offs

The sockets are made in gfr Polybutylene Terephthalate PBT of type pcg (RTI long-range temperature 130 °C). Solder-tag material is brass tinned and solder-pin material is tin bronze, tinned.
Maximum solder temperature 350 °C, 2 sec.
Special materials – e.g. irradiated cross-linked – and designs on request, dimensions in mm/inch.

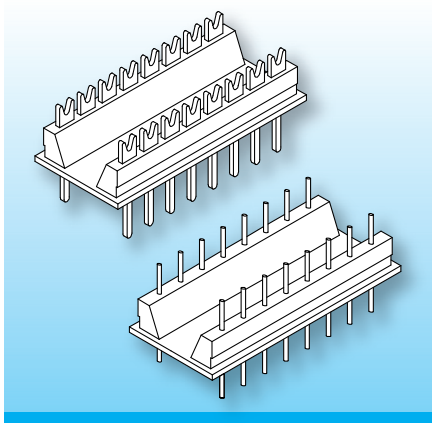

DIL-Sockets (Dual-In-Line) are suitable for complex circuits such as logic circuits, resistor networks or diode matrix. The sockets feature “stand-offs” which allow clean soldering of the wires and of the sockets onto the pcb. A suitable DIL-Box is available.

Type	Order-Code		Accessories
Socket: U 14/s-/pcg	N0348-047	on request	DIL-Box D14-7
Solder-tag: s5/wd	N0350-261	on request	DIL-Box D14-10

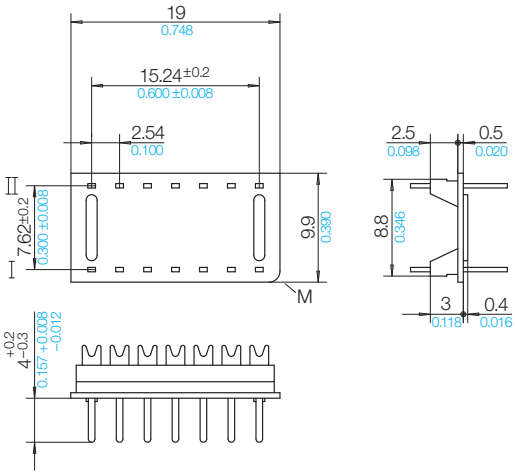

Grid
View tag-side

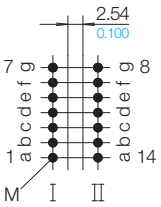

© 06/2016 by NORWE GmbH

Warranties:
refer to Terms and Conditions of Sale

Valid version of data sheet online

QR Online-Version

NORWE GmbH
Postfach 13 56
51691 Bergneustadt
Paulstraße 5, Pernze
51702 Bergneustadt
Deutschland
Telefon +49 (0) 27 63-807-0
Telefax +49 (0) 27 63-807-77
E-mail verkauf@norwe.de
Internet www.norwe.de
www.norwe.eu

NORWE Inc.
P.O. Box 25 11
North Canton, OH 44720-0511
United States of America
Telefon +1-330 497-8113
Telefax +1-330 305-0592
E-mail usa@norwe.com
Internet www.norwe.com