EI, UI Coilformers

The coilformers are made in gfr Polyamide PA66 of type p6g (RTI long-range temperature +125 °C). Pin material is tin bronze, tinned and tag material is brass, tinned. Maximum solder temperature 350 °C, 2 sec. (Special materials and designs on request, dimensions in mm/inch).

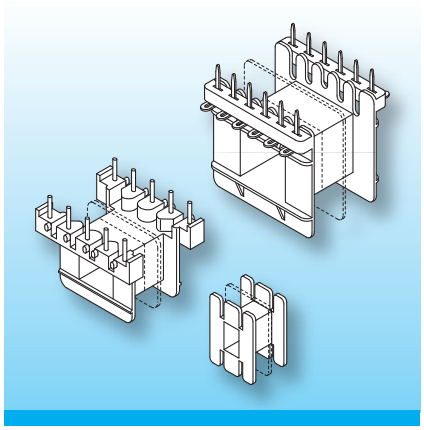

Due to their designs with different connection systems (press-fit pins, bent over pins, soldertags, etc.) the coilformer-versions allow radial as well as axial binding on of the wires, matching your individual fields of application.
We are about to draw up a catalogue of this extensive series step by step – you will find the latest survey of available components on our homepage. For special designs and dimensions as well as available accessories please contact our technical specialists.

Type	Order-Code	Accessories
Coilformer: EJ 60/1k/2-8/5.0-oo/p6g	06320-024	
Coilformer: EJ 60/2k/2-8/5.0-oo/p6g	06321-024	
Solder-pin: h815/ua	73501-212	
Solder-pin: z810/ua	73296-212	

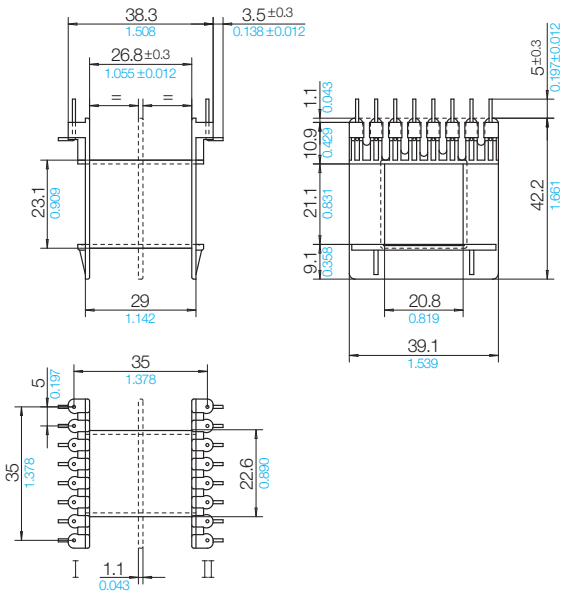

Grid
View pin-side

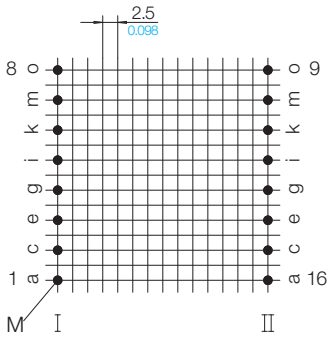

© 03/2013 by NORWE GmbH

All dimensions in mm/inch

The permissible deviations according to DIN 16901 apply as tolerances

Warranties:
refer to Terms and Conditions of Sale

Valid version of data sheet online

QR Online-Version

NORWE GmbH

Postfach 13 56
51691 Bergneustadt

Paulstraße 5, Pernze
51702 Bergneustadt

Deutschland

Telefon +49 (0) 27 63-807-0
Telefax +49 (0) 27 63-807-77
E-mail verkauf@norwe.de
Internet www.norwe.de
www.norwe.eu

NORWE Inc.

P.O. Box 25 11
North Canton, OH 44720-0511

United States of America

Telefon +1-330 497-8113
Telefax +1-330 305-0592
E-mail usa@norwe.com
Internet www.norwe.com