EI, UI Coilformers

The coilformers are made in gfr Polyamide PA66 of type p6g (RTI long-range temperature +125 °C). Pin material is tin bronze, tinned and tag material is brass, tinned. Maximum solder temperature 350 °C, 2 sec. (Special materials and designs on request, dimensions in mm/inch).

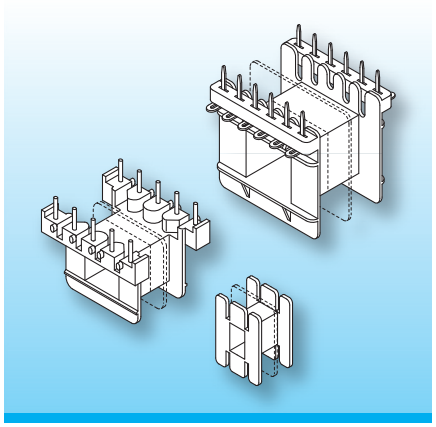

Due to their designs with different connection systems (press-fit pins, bent over pins, soldertags, etc.) the coilformer-versions allow radial as well as axial binding on of the wires, matching your individual fields of application.
We are about to draw up a catalogue of this extensive series step by step – you will find the latest survey of available components on our homepage. For special designs and dimensions as well as available accessories please contact our technical specialists.

Type	Order-Code	Accessories
Coilformer: EJ 30-15/1k/7-8/5.08-ii/p6g	04810-024	on request
Coilformer: EJ 30-15/7-5k/7-8/5.08-ii/p6g	04811-024	
Solder-pin: h810/ua	73496-212	
Solder-pin: z808/ua	73294-212	

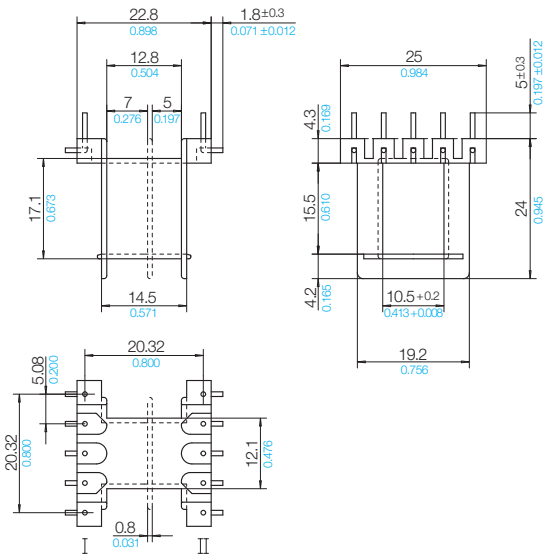

Grid

View pin-side

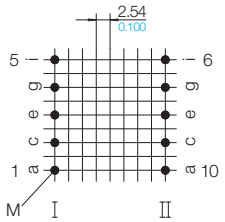

© 07/2016 by NORWE GmbH

Warranties:
refer to Terms and Conditions of Sale

Valid version of data sheet online

QR Online-Version

NORWE GmbH
Postfach 13 56
51691 Bergneustadt
Paulstraße 5, Pernze
51702 Bergneustadt
Deutschland
Telefon +49 (0) 27 63-807-0
Telefax +49 (0) 27 63-807-77
E-mail verkauf@norwe.de
Internet www.norwe.de
www.norwe.eu

NORWE Inc.
P.O. Box 25 11
North Canton, OH 44720-0511
United States of America
Telefon +1-330 497-8113
Telefax +1-330 305-0592
E-mail usa@norwe.com
Internet www.norwe.com