RM-SMD Coilformers (fu)

The coilformers are made in gfr Polyphenylene Sulfide PPS of type torA504 (RTI long-range temperature +130° C) and made in gfr Polyamide PA66 of type A3X2G10 (RTI long-range temperature +115° C) and are suitable for reflow soldering.
Pin material: tin bronze, tinned.
Special materials – e.g. irradiated cross-linked – and designs on request, dimensions in mm/inch.

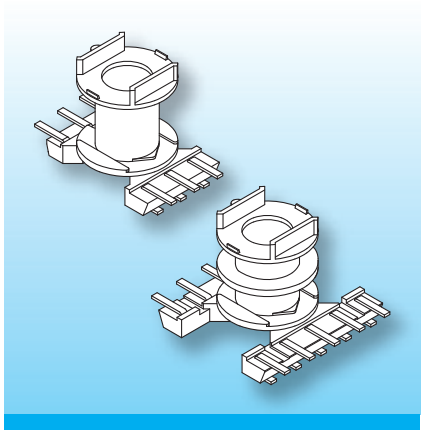

The coilformers are fitted with U-shaped terminals. The two sides of the terminals allow automatic binding-on and soldering of the wires, leaving the pcb-side of the terminal free from tin. The tolerance compensator TA on the top flange eliminates the otherwise required insulation washer.

Type	Order-Code	Accessories
Coilformer: RM 5-LP-SMD2/1k/8f-625-/torA504	90542-132	
Coilformer: RM 5-LP-SMD2/2k/8f-625-/torA504	N0332-132	on request
Solder-pin: fu625-67/ub	75826-213	

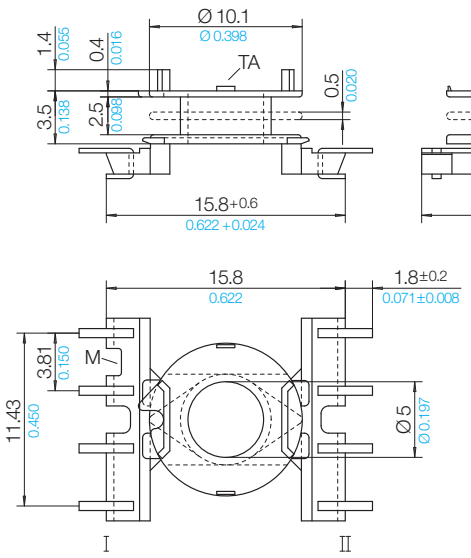

Pin Connecting Surface

View pin-side

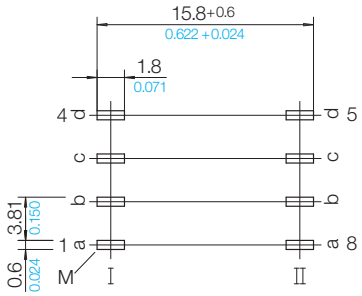

© 07/2011 by NORWE GmbH

All dimensions in mm/inch

The permissible deviations according to DIN 16901 apply as tolerances

Warranties:
refer to Terms and Conditions of Sale

NORWE GmbH

Postfach 13 56
51691 Bergneustadt

Paulstraße 5, Pernze
51702 Bergneustadt

Deutschland

Telefon +49 (0) 27 63-807-0
Telefax +49 (0) 27 63-807-77
E-mail verkauf@norwe.de
Internet www.norwe.de
www.norwe.eu

NORWE Inc.

P.O. Box 25 11
North Canton, OH 44720-0511

United States of America

Telefon +1-330 497-8113
Telefax +1-330 305-0592
E-mail usa@norwe.com
Internet www.norwe.com