NORWE®

Components for Power Conversion PQ-Series

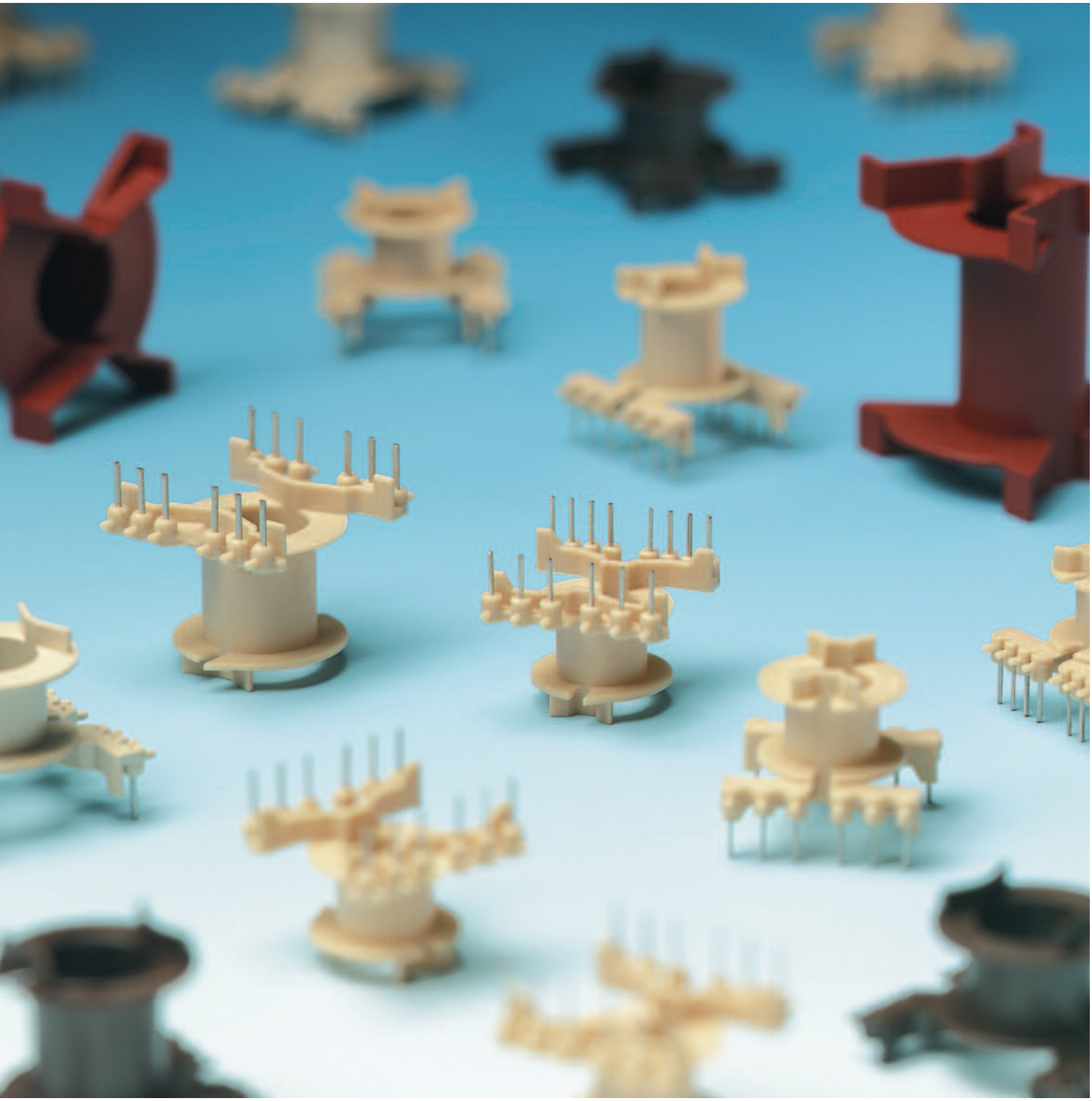

This catalogue contains information on all PQ components manufactured by NORWE.

PQ components are designed to achieve the highest power output per volume and weight and are therefore ideally suited for the requirements of the electronic/ electrical industry. Designed with a vertical magnetic axis, the space requirement on the pcb is kept to the minimum. The coilformers are fitted with straight pins, in DIL configuration, and the binding-on of the wires is axially. They are suitable for cost efficient winding on NC machines. Tension relief is provided by routing the wires over the plastic “noses”. “Stand-offs” ensure that there are no cold-solder joints into the pcb. When large diameter or litz wire is used, a range of coilformers for “flying-leads” is available.

Fully pinned coilformers – in small quantities – are usually available from stock. We can quote for coilformers with pins fitted to customers specification. Again, leadtimes are relatively short.

All dimensions in mm/inch.
The permissible deviations according to DIN 16901 apply as tolerances.

In addition, our extensive range of modular tooling allows almost unlimited changes to accommodate customers specification. This tooling system also allows short tooling times and is very cost effective.

Should you need further assistance, technically or when ordering, please do not hesitate to contact us.

© 11/2022 by NORWE GmbH

All dimensions in mm/inch

The permissible deviations according to DIN 16901 apply as tolerances

Warranties:
refer to Terms and Conditions of Sale

Valid version of data sheet online

QR Online-Version

NORWE GmbH

Paulstraße 5, Pernze
51702 Bergneustadt

Deutschland

Telefon +49 (0) 27 63-807-0
E-mail verkauf@norwe.de
Internet www.norwe.de
www.norwe.eu

NORWE Inc.

P.O. Box 25 11
North Canton, OH 44720-0511

United States of America

Telefon +1-330 497-8113
E-mail usa@norwe.com
Internet www.norwe.com

Solder-pins used for PQ class coilformers

The solder-pins matched to the coilformers are listed below. The material used is tin bronze, tinned.
Further standard types are listed in our catalogue “Stamped and Pressed Components for Electronic Applications”.
(Special materials and designs on request. Dimensions in mm/inch).

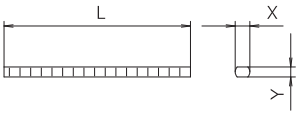

Solder-pin	L	X	Y
z608/ua (73264-212)	8.0 0.315	0.66 0.026	0.45 0.018
z808/ua (73294-212)	8.0 0.315	0.88 0.035	0.60 0.024

© 11/2022 by NORWE GmbH

All dimensions in mm/inch

The permissible deviations according to DIN 16901 apply as tolerances

Warranties:
refer to Terms and Conditions of Sale

Valid version of data sheet online

QR Online-Version

NORWE GmbH
Paulstraße 5, Pernze
51702 Bergneustadt
Deutschland
Telefon +49 (0) 27 63-807-0
E-mail verkauf@norwe.de
Internet www.norwe.de
www.norwe.eu

NORWE Inc.
P.O. Box 25 11
North Canton, OH 44720-0511
United States of America
Telefon +1-330 497-8113
E-mail usa@norwe.com
Internet www.norwe.com

PQ-Ferrite Cores
The tables below show the dimensions and the magnetic characteristics per set of the ferrite cores for the coilformers shown in this catalogue. The data can be used as an orientation in the design of application specific converters. Specific details on the ferrite cores and materials should be available from the catalogues of the ferrite manufacturers.

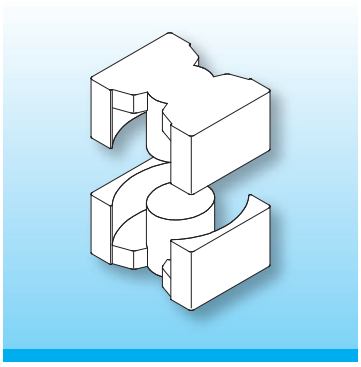

l_e - effective length

A_e - effective area

A_{min} - core cross section

V_e - effective volume

Ferrite Core	l_e	A_e	A_{min}	V_e
	mm/inch	mm²/inch²	mm²/inch²	mm³/inch³
PQ 16/11	27.0 1.063	42 0.065	38.5 0.060	1136 0.069
PQ 20/16	37.4 1.472	62 0.096	58.1 0.090	2310 0.141
PQ 20/20	45.1 1.776	62 0.096	58.1 0.090	3790 0.231
PQ 26/20	46.3 1.823	119 0.184	109.4 0.170	5490 0.335
PQ 26/25	55.5 2.185	118 0.183	109.4 0.170	6530 0.398
PQ 32/20	55.5 2.185	170 0.264	136.8 0.212	9420 0.575
PQ 32/30	74.6 2.937	161 0.250	136.8 0.212	11970 0.730
PQ 35/35	87.9 3.461	196 0.304	156.1 0.242	17260 1.053
PQ 40/40	101.9 4.012	201 0.312	167.4 0.259	20450 1.248
PQ 50/40	93.0 3.661	334 0.518	314.0 0.487	31250 1.907
PQ 50/50	113.0 4.449	328 0.508	303.0 0.470	37238 2.272
PQ 65/54	123.0 4.843	597 0.925	511.0 0.792	73552 4.488
PQ 78/39	119.0 4.685	480 0.744	510.0 0.791	56900 3.472
PQ 107/87	204.0 8.031	1428 2.213	1320.0 2.046	290600 17.734

© 11/2022 by NORWE GmbH

All dimensions in mm/inch

The permissible deviations according to DIN 16901 apply as tolerances

Warranties:
refer to Terms and Conditions of Sale

Valid version of data sheet online

QR Online-Version

NORWE GmbH
Paulstraße 5, Pernze
51702 Bergneustadt
Deutschland
Telefon +49 (0) 27 63-807-0
E-mail verkauf@norwe.de
Internet www.norwe.de
www.norwe.eu

NORWE Inc.
P.O. Box 25 11
North Canton, OH 44720-0511
United States of America
Telefon +1-330 497-8113
E-mail usa@norwe.com
Internet www.norwe.com

PQ Coilformers

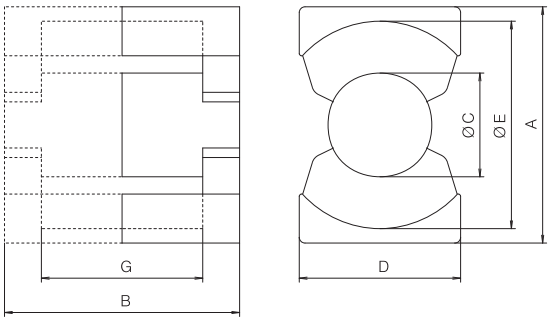

Ferrite Core	A	B	C	D	E	G
	mm/inch	mm/inch	mm/inch	mm/inch	mm/inch	mm/inch
PQ 16/11	16.4 ± 0.30 0.646 ± 0.012	11.60 ± 0.20 0.457 ± 0.008	7.00 ± 0.20 0.276 ± 0.008	11.2 ± 0.30 0.441 ± 0.012	14.4 ± 0.30 0.567 ± 0.012	6.7 ± 0.30 0.236 ± 0.012
PQ 20/16	20.5 ± 0.40 0.807 ± 0.016	16.20 ± 0.20 0.638 ± 0.008	8.80 ± 0.20 0.346 ± 0.008	14.0 ± 0.40 0.551 ± 0.016	18.0 ± 0.40 0.709 ± 0.016	10.3 ± 0.30 0.406 ± 0.012
PQ 20/20	20.5 ± 0.40 0.807 ± 0.016	20.20 ± 0.20 0.795 ± 0.008	8.80 ± 0.20 0.346 ± 0.008	14.0 ± 0.40 0.551 ± 0.016	18.0 ± 0.40 0.709 ± 0.016	14.3 ± 0.30 0.563 ± 0.012
PQ 26/20	26.5 ± 0.45 1.043 ± 0.018	20.15 ± 0.25 0.793 ± 0.010	12.00 ± 0.20 0.472 ± 0.008	19.0 ± 0.45 0.748 ± 0.018	22.5 ± 0.45 0.886 ± 0.018	11.5 ± 0.30 0.453 ± 0.012
PQ 26/25	26.5 ± 0.45 1.043 ± 0.018	24.75 ± 0.25 0.974 ± 0.010	12.00 ± 0.20 0.472 ± 0.008	19.0 ± 0.45 0.748 ± 0.018	22.5 ± 0.45 0.886 ± 0.018	16.1 ± 0.30 0.634 ± 0.012
PQ 32/20	32.0 ± 0.50 1.260 ± 0.020	20.55 ± 0.25 0.809 ± 0.010	13.45 ± 0.25 0.530 ± 0.010	22.0 ± 0.50 0.866 ± 0.020	27.5 ± 0.50 1.083 ± 0.020	11.5 ± 0.30 0.453 ± 0.012
PQ 32/30	32.0 ± 0.50 1.260 ± 0.020	30.35 ± 0.25 1.195 ± 0.010	13.45 ± 0.25 0.530 ± 0.010	22.0 ± 0.50 0.866 ± 0.020	27.5 ± 0.50 1.083 ± 0.020	21.3 ± 0.30 0.839 ± 0.012
PQ 35/25	35.1 ± 0.60 1.382 ± 0.024	24.75 ± 0.25 0.974 ± 0.010	14.35 ± 0.25 0.565 ± 0.010	26.0 ± 0.50 1.024 ± 0.020	32.0 ± 0.50 1.260 ± 0.020	15.0 ± 0.30 0.591 ± 0.012
PQ 35/35	35.1 ± 0.60 1.382 ± 0.024	34.75 ± 0.25 1.368 ± 0.010	14.35 ± 0.25 0.545 ± 0.010	26.0 ± 0.50 1.024 ± 0.020	32.0 ± 0.50 1.260 ± 0.020	25.0 ± 0.30 0.984 ± 0.012
PQ 40/40	40.5 ± 0.90 1.594 ± 0.035	39.75 ± 0.25 1.565 ± 0.010	14.90 ± 0.30 0.587 ± 0.012	28.0 ± 0.60 1.102 ± 0.024	37.0 ± 0.60 1.457 ± 0.024	29.5 ± 0.30 1.161 ± 0.012
PQ 50/40	50.0 ± 0.70 1.969 ± 0.028	39.95 ± 0.25 1.573 ± 0.010	20.00 ± 0.35 0.787 ± 0.014	32.0 ± 0.50 1.260 ± 0.020	44.0 ± 0.70 1.732 ± 0.028	26.1 ± 0.30 1.028 ± 0.012
PQ 50/50	50.0 ± 0.70 1.969 ± 0.028	49.95 ± 0.25 1.967 ± 0.010	20.00 ± 0.35 0.787 ± 0.014	32.0 ± 0.60 1.260 ± 0.024	44.0 ± 0.70 1.732 ± 0.028	36.1 ± 0.30 1.421 ± 0.012
PQ 65/54	65.0 ± 1.30 2.559 ± 0.051	54.00 ± 0.40 2.126 ± 0.016	26.00 ± 0.45 1.024 ± 0.018	40.0 ± 0.80 1.575 ± 0.004	53.0 ± 1.00 2.087 ± 0.039	36.0 ± 0.50 1.417 ± 0.020
PQ 78/39	78.5 ± 1.50 3.091 ± 0.059	39.40 ± 0.50 1.551 ± 0.020	25.50 ± 0.50 1.004 ± 0.020	42.0 ± 0.80 1.654 ± 0.031	70.5 ± 1.40 2.776 ± 0.055	25.8 ± 0.60 1.016 ± 0.024
PQ 107/87	107.0 ± 2.00 4.213 ± 0.079	87.00 ± 0.80 3.425 ± 0.031	41.00 ± 0.80 1.614 ± 0.031	70.0 ± 1.50 2.756 ± 0.059	95.5 ± 1.80 3.760 ± 0.071	56.0 ± 1.00 2.205 ± 0.039

© 11/2022 by NORWE GmbH

All dimensions in mm/inch

The permissible deviations according to DIN 16901 apply as tolerances

Warranties:
refer to Terms and Conditions of Sale

Valid version of data sheet online

QR Online-Version

NORWE GmbH

Paulstraße 5, Pernze
51702 Bergneustadt

Deutschland

Telefon +49 (0) 27 63-807-0
E-mail verkauf@norwe.de
Internet www.norwe.de
www.norwe.eu

NORWE Inc.

P.O. Box 25 11
North Canton, OH 44720-0511

United States of America

Telefon +1-330 497-8113
E-mail usa@norwe.com
Internet www.norwe.com

Design of transformers with PQ-Coilformers
The following winding data tables can be used as an orientation for the design of PQ-Transformers.

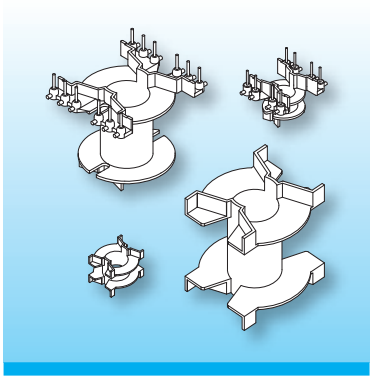

D_1 - Winding Area diameter inside

D_2 - Winding Area diameter outside

L_1 - Winding Area length

A_N - Winding cross section

l_N - Average length of turn

Type	D_1	D_2	L_1	A_N	l_N
	mm/inch	mm/inch	mm/inch	mm²/inch²	mm/inch
PQ 16/11	9.00 0.354	13.70 0.539	4.60 0.181	10.80 0.425	35.70 1.406
PQ 20/16	11.00 0.433	17.20 0.677	8.00 0.315	24.80 0.976	44.30 1.744
PQ 20/20	11.00 0.433	17.20 0.677	12.00 0.472	37.20 1.465	44.30 1.744
PQ 26/20	14.00 0.551	21.60 0.850	9.20 0.362	34.90 1.374	55.90 2.201
PQ 26/25	14.00 0.551	21.60 0.850	13.90 0.547	52.80 2.079	55.90 2.201
PQ 32/20	16.00 0.630	26.60 1.047	8.80 0.364	46.60 1.835	66.90 2.634
PQ 32/30	16.00 0.630	26.60 1.047	18.60 0.732	98.50 3.878	66.90 2.634
PQ 35/25	16.90 0.665	31.10 1.224	12.50 0.492	88.70 3.492	75.40 2.969
PQ 35/35	16.90 0.665	31.10 1.224	22.30 0.878	158.30 6.232	75.40 2.969
PQ 40/40	17.50 0.689	36.00 1.417	26.80 1.055	247.90 9.760	84.00 3.307
PQ 50/50	23.20 0.913	42.90 1.689	32.80 1.293	323.00 12.717	103.80 4.087
PQ 65/54	28.90 1.138	51.60 2.031	32.50 1.280	368.90 14.524	126.50 4.980
PQ 78/39	28.60 1.126	68.70 2.705	22.40 0.882	449.10 17.681	152.80 6.016
PQ 107/87	44.50 1.752	93.10 3.665	51.80 2.039	1258.70 49.555	216.10 8.508

© 11/2022 by NORWE GmbH

All dimensions in mm/inch

The permissible deviations according to DIN 16901 apply as tolerances

Warranties:
refer to Terms and Conditions of Sale

Valid version of data sheet online

QR Online-Version

NORWE GmbH
Paulstraße 5, Pernze
51702 Bergneustadt
Deutschland
Telefon +49 (0) 27 63-807-0
E-mail verkauf@norwe.de
Internet www.norwe.de
www.norwe.eu

NORWE Inc.
P.O. Box 25 11
North Canton, OH 44720-0511
United States of America
Telefon +1-330 497-8113
E-mail usa@norwe.com
Internet www.norwe.com

Thermoplastic Materials

The following survey contains supplementary information on the different thermoplastic-qualities.
The material quality orientates to the conventional use of the components. For technical reasons alternative materials cannot be used for all articles.
Consult our qualified specialists regarding your individual material requests – we will be pleased to check whether your material requirements can be realized.
Further information on the materials can also be obtained from our homepage (e.g. to call up the UL cards).

NORWE Mat.-Code	NORWE Mat.-Description	Chemical Symbol	Tradename Manufacturer	UL-File-No.	Flammability Rating acc. UL	RTI Elec acc. UL
039	A3X2G5 sv.	PA66 Polyamid 66	A3X2G5 cross-linked Ultramid BASF AG	–	–	(+120°C)
087	rtg nat.	PET Polyethylen-terephthalat	FR 530 L Rynite DuPont	E 41938	V-0 (0.35)	+155°C
096	TE 250 F6	PA46 Polyamid 46	TE250F6 Stanyl DSM	E 47960	V-0 (0.35) V-0 (0.75)	+ 65°C +140°C
106	A RV250 nat.	PA66 Polyamid 66	Radiflam A RV250 AF RADICINOVACIPS SPA	E116324	V-0 (0.75)	+115°C
132	torA504	PPS Polyphenylensulfid	A504X90 natur Torelina Toray Industries Inc	E41797	V-0 (0.28)	+ 130°C
186	SKYT.5220FR	PET Polyethylen-terephthalat	5220FR natur Skytra SK Chemicals Co. Ltd.	E 215991	V-0 (0.70)	+ 155°C
243	Zen.6130L, sw	LCP Liquid Crystal Polymer	6130L black Zenite TICONA	E 344082	V-0 (0.38)	+240°C

Explanations on the above survey of materials:

NORWE Mat.-Code . . . . . designates the number NORWE fixed for the material

NORWE Mat.-Description . . . . . names the NORWE-abbreviation for the material

Chemical Symbol . . . . . classifies the chemical product group of the material

Tradename . . . . . designates the product name or trade name fixed by the manufacturer

Manufacturer . . . . . name of manufacturer

UL-File-No. . . . . material quality tested and certified with respect to safety and flammability. The manufacturers of certified and approved products receive a so-called recognition card (yellow card) in which the product qualities are listed in detail. You find all relevant yellow cards – also called UL cards – for different material qualities on our homepage or you can obtain them from us.

Flammability Rating acc. UL . . . determines the flammability of thermoplastic materials based on burning tests in accordance with UL 94 considering the wall thickness of the material.

© 11/2022 by NORWE GmbH

All dimensions in mm/inch

The permissible deviations according to DIN 16901 apply as tolerances

Warranties:
refer to Terms and Conditions of Sale

Valid version of data sheet online

QR Online-Version

NORWE GmbH
Paulstraße 5, Pernze
51702 Bergneustadt
Deutschland
Telefon +49 (0) 27 63-807-0
E-mail verkauf@norwe.de
Internet www.norwe.de
www.norwe.eu

NORWE Inc.
P.O. Box 25 11
North Canton, OH 44720-0511
United States of America
Telefon +1-330 497-8113
E-mail usa@norwe.com
Internet www.norwe.com

© 11/2022 by NORWE GmbH

All dimensions in mm/inch

The permissible deviations according to DIN 16901 apply as tolerances

Warranties:
refer to Terms and Conditions of Sale

Contact to NORWE

NORWE GmbH

Paulstraße 5, Pernze
51702 Bergneustadt

Deutschland

Telefon +49 (0) 27 63-807-0
E-mail verkauf@norwe.de
Internet www.norwe.de
www.norwe.eu

NORWE Inc.

P.O. Box 25 11
North Canton, OH 44720-0511

United States of America

Telefon +1-330 497-8113
E-mail usa@norwe.com
Internet www.norwe.com

NORWE – online

All informations, product specifications, latest news and as well our extensive service offering you find on out up-to-date websites.

Up-to-date product database

- enlarged, sophisticated search function
- comprehensive product survey
- Product Data Sheets as PDF-download
- complete product-catalogues as PDF-download

www.norwe.de

www.norwe.com

Up-to-date contacts

- contacts all over the world

www.norwe.eu

Up-to-date information

- data and facts of the company
- presence on trade fairs all over the world
- product innovations
- material database with UL-cards

www.coilformers.info

www.carretes.eu

Individual special designs

- problem solutions orientated to industries' demands

www.carreteis.info

www.carcasses.info

Current certifications

- EN ISO 9001:2008
- UL 746 D
- EN ISO 14001:2005
- AEOC

www.spulenkoerper.info

www.karkasi-katushek.info

Services

- qualified advice
- cost neutral sample request
- individual quotation request
- mobile access via QR-Code

www.corpi-bobina.info

© 11/2022 by NORWE GmbH

All dimensions in mm/inch

The permissible deviations according to DIN 16901 apply as tolerances

Warranties:
refer to Terms and Conditions of Sale

Contact to NORWE

NORWE GmbH

Paulstraße 5, Pernze
51702 Bergneustadt

Deutschland

Telefon +49 (0) 27 63-807-0
E-mail verkauf@norwe.de
Internet www.norwe.de
www.norwe.eu

NORWE Inc.

P.O. Box 25 11
North Canton, OH 44720-0511

United States of America

Telefon +1-330 497-8113
E-mail usa@norwe.com
Internet www.norwe.com