Standard RM
with Dual-in-Line solder-tags
The coilformers are made in gfr Polyethylene Terephthalate PET of type rtg nat. (RTI long-range temperature +155° C), Polyamide PA66 of type p6g (RTI long-range temperature +125° C) and A3X2G10 (RTI long-range temperature +115° C). Tag material: brass, tinned. Maximum solder temperature 350° C, 2 sec.

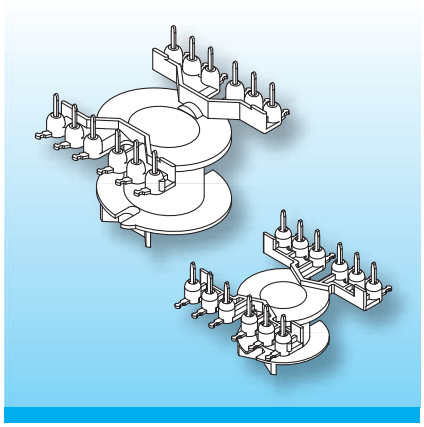

The coilformers have two rows of solder-tags, pcb-style dual-in-line. Binding-on of thin wire and litz can be done radially, and tension relief is possible. A tolerance-compensator (TA) on the top flange eliminates the normally used spring-washer. Special materials – eg. irradiated cross-linked – and designs on request, dimensions in mm/inch.

Type	Order-Code	Accessories
Coilformer: RM 8/1k/12-s/ii/rtg	90076-087	
Coilformer: RM 8/mF/1k/12-s/ii/rtg	90284-087	
Solder-tag: s25/wd	75519-261	

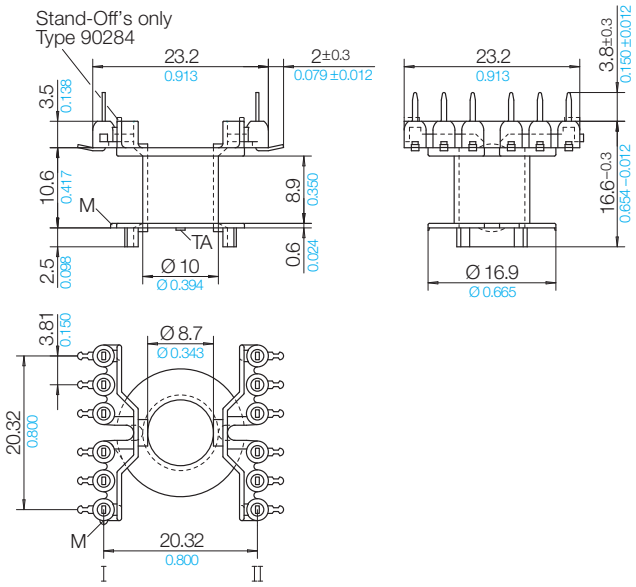

Grid
View tag-side

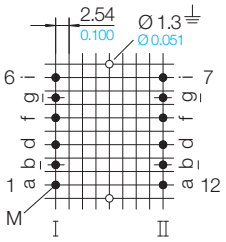

© 11/2011 by NORWE GmbH

All dimensions in mm/inch

The permissible deviations according to DIN 16901 apply as tolerances

Warranties:
refer to Terms and Conditions of Sale

NORWE GmbH
Postfach 13 56
51691 Bergneustadt

Paulstraße 5, Pernze
51702 Bergneustadt

Deutschland

Telefon +49 (0) 27 63-807-0
Telefax +49 (0) 27 63-807-77
E-mail verkauf@norwe.de
Internet www.norwe.de
www.norwe.eu

NORWE Inc.
P.O. Box 25 11
North Canton, OH 44720-0511

United States of America

Telefon +1-330 497-8113
Telefax +1-330 305-0592
E-mail usa@norwe.com
Internet www.norwe.com