RM Power Conversion 45°
The coilformers are made in gfr Polyphenylene Sulfide PPS of type torA504 (RTI long-range temperature +130° C).
Pin material: tin bronze, tinned.
Maximum solder temperature 300° C, 2 sec.
Special materials – eg. irradiated cross-linked – and designs on request, dimensions in mm/inch.

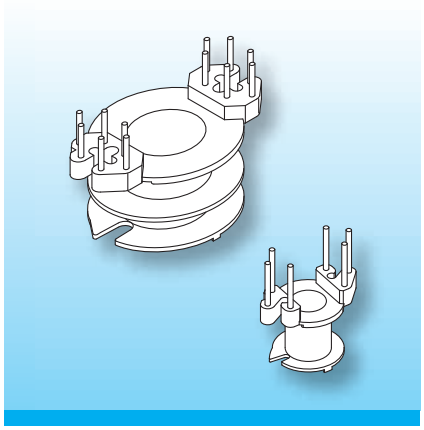

The coilformers are fitted with straight solder-pins. Binding-on of the wires is axially. The wires are guided into the winding room through centrally positioned slots in the lower flange.
A reinforced flange reduces the risk of breakage when binding-on the wire and ensures a tight fit of the solder-pins which are inserted after moulding.

Type	Order-Code	Accessories
Coilformer: RM 14/1k/12-8/torA504	60112-132	
Coilformer: RM 14/2k/12-8/torA504	60212-132	
Solder-pin: z807/ua	73293-212	

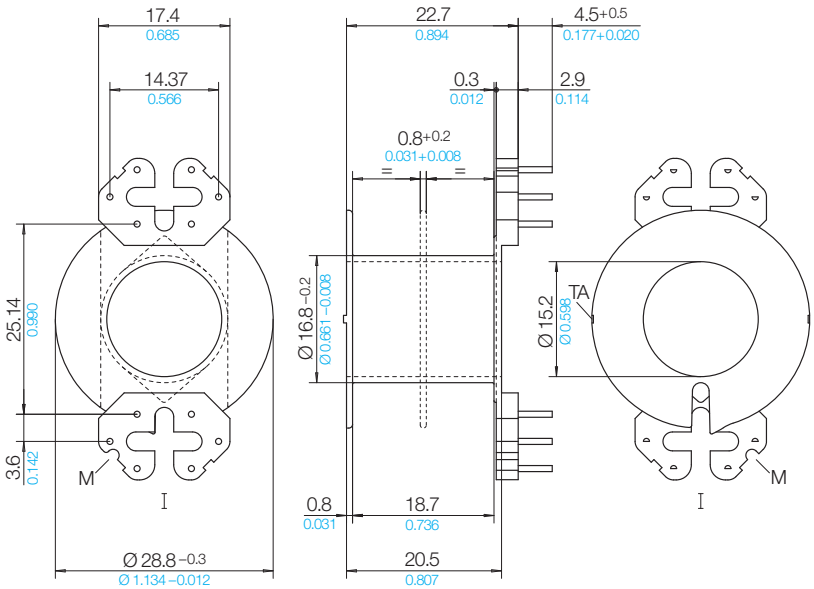

Grid
View pin-side

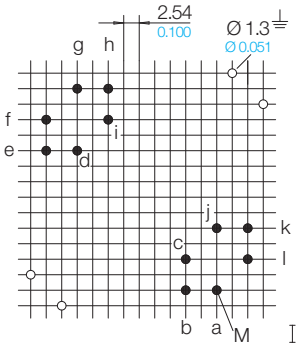

© 11/2011 by NORWE GmbH

All dimensions in mm/inch

The permissible deviations according to DIN 16901 apply as tolerances

Warranties:
refer to Terms and Conditions of Sale

NORWE GmbH

Postfach 13 56
51691 Bergneustadt

Paulstraße 5, Pernze
51702 Bergneustadt

Deutschland

Telefon +49 (0) 27 63-807-0
Telefax +49 (0) 27 63-807-77
E-mail verkauf@norwe.de
Internet www.norwe.de
www.norwe.eu

NORWE Inc.

P.O. Box 25 11
North Canton, OH 44720-0511

United States of America

Telefon +1-330 497-8113
Telefax +1-330 305-0592
E-mail usa@norwe.com
Internet www.norwe.com